Photocouplers Photorelay

TLP3554

1. Applications

- Mechanical relay replacements
- Security Systems
- Measuring Equipment
- Factory Automation (FA)
- Amusement Equipment

2. General

The TLP3554 photorelay consists of a photo MOSFET optically coupled to an infrared light emitting diode. It is housed in a 4-pin DIP package. The low ON-state resistance and the high permissible ON-state current of the the TLP3554 make it suitable for power line control applications.

3. Features

(1) Normally open (1-Form-A)
(2) OFF-state output terminal voltage: 40 V (min)
(3) Trigger LED current: 3 mA (max)
(4) ON-state current: 2.5 A (max)
(5) ON-state resistance: 150 mΩ (max)
(6) Isolation voltage: 2500 Vrms (min)
(7) Safety standards
UL-under application: UL1577 File No.E67349
cUL-under application: CSA Component Acceptance Service No.5A, File No.E67349

4. Packaging and Pin Configuration

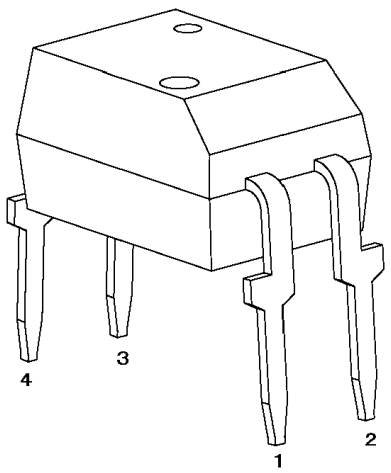

11-5B2S

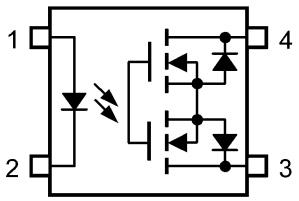

1: Anode
2: Cathode
3: Drain D1
4: Drain D2

5. Internal Circuit

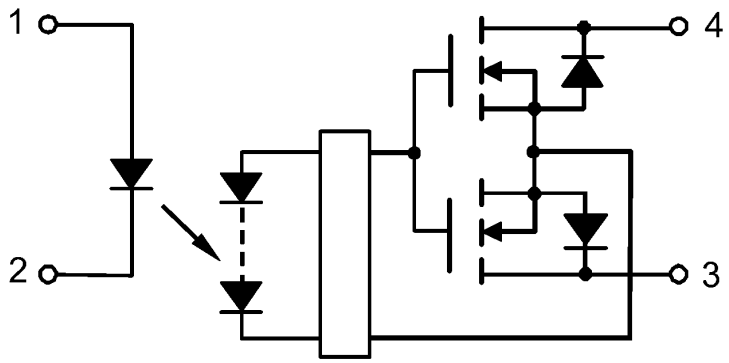

Fig. 5.1 Internal Circuit

6. Absolute Maximum Ratings (Note) (Unless otherwise specified, T_a = 25°C)

	Characteristics		Symbol	Note	Rating	Unit
LED	Input forward current		I_F		30	mA
	Input forward current derating	($T_a \geq$ 25°C)	$\Delta I_F/\Delta T_a$		-0.3	mA/°C
	Input forward current (pulsed)	(100 μs pulse, 100 pps)	I_{FP}		1	A
	Input reverse voltage		V_R		5	V
	Junction temperature		T_j		125	°C
Detector	OFF-state output terminal voltage		V_{OFF}		40	V
	ON-state current		I_{ON}		2.5	A
	ON-state current derating	($T_a \geq$ 25°C)	$\Delta I_{ON}/\Delta T_a$		-25	mA/°C
	ON-state current (pulsed)	(t = 100 ms, Duty = 1/10)	I_{ONP}		7.5	A
	Junction temperature		T_j		125	°C
Common	Storage temperature		T_{stg}		-55 to 125	
	Operating temperature		T_{opr}		-40 to 85	
	Lead soldering temperature	(10 s)	T_{sol}		260	
	Isolation voltage	AC, 1 min, R.H. ≤ 60%	BV_S	(Note 1)	2500	Vrms

Note: Using continuously under heavy loads (e.g. the application of high temperature/current/voltage and the significant change in temperature, etc.) may cause this product to decrease in the reliability significantly even if the operating conditions (i.e. operating temperature/current/voltage, etc.) are within the absolute maximum ratings.
Please design the appropriate reliability upon reviewing the Toshiba Semiconductor Reliability Handbook ("Handling Precautions"/"Derating Concept and Methods") and individual reliability data (i.e. reliability test report and estimated failure rate, etc).

Note 1: This device is considered as a two-terminal device: Pins 1 and 2 are shorted together, and pins 3 and 4 are shorted together.

7. Recommended Operating Conditions (Note)

Characteristics	Symbol	Note	Min	Typ.	Max	Unit
Supply voltage	V_{DD}		—	—	32	V
Input forward current	I_F		5	10	25	mA
ON-state current	I_{ON}		—	—	2.5	A
Operating temperature	T_{opr}		-20	—	65	°C

Note: The recommended operating conditions are given as a design guide necessary to obtain the intended performance of the device. Each parameter is an independent value. When creating a system design using this device, the electrical characteristics specified in this datasheet should also be considered.

8. Electrical Characteristics (Unless otherwise specified, T_a = 25°C)

	Characteristics	Symbol	Note	Test Condition	Min	Typ.	Max	Unit
LED	Input forward voltage	V_F		I_F = 10 mA	1.18	1.33	1.48	V
	Input reverse current	I_R		V_R = 5 V	—	—	10	μA
	Input capacitance	C_t		V = 0 V, f = 1 MHz	—	70	—	pF
Detector	OFF-state current	I_{OFF}		V_{OFF} = 40 V	—	—	1	μA
	Output capacitance	C_{OFF}		V = 0 V, f = 1 MHz	—	300	—	pF

9. Coupled Electrical Characteristics (Unless otherwise specified, T_a = 25°C)

Characteristics	Symbol	Note	Test Condition	Min	Typ.	Max	Unit
Trigger LED current	I_{FT}		I_{ON} = 1.0 A	—	0.5	3	mA
Return LED current	I_{FC}		I_{OFF} = 10 μA	0.1	—	—	mA
ON-state resistance	R_{ON}		I_{ON} = 2.0 A, I_F = 5 mA, t < 1 s	—	50	150	mΩ

10. Isolation Characteristics (Unless otherwise specified, T_a = 25°C)

Characteristics	Symbol	Note	Test Condition	Min	Typ.	Max	Unit
Total capacitance (input to output)	C_S	(Note 1)	V_S = 0 V, f = 1 MHz	—	0.8	—	pF
Isolation resistance	R_S	(Note 1)	V_S = 500 V, R.H. ≤ 60%	5×10^{10}	10^{14}	—	Ω
Isolation voltage	BV_S		AC, 1 min	2500	—	—	Vrms
			AC, 1s in oil	—	5000	—	
			DC, 1 min, in oil	—	5000	—	Vdc

Note 1: This device is considered as a two-terminal device: Pins 1 and 2 are shorted together, and pins 3 and 4 are shorted together.

11. Switching Characteristics (Unless otherwise specified, T_a = 25°C)

Characteristics	Symbol	Note	Test Condition	Min	Typ	Max	Unit
Turn-on time	t_{ON}		See Fig. 11.1. R_L = 200 Ω, V_{DD} = 20 V, I_F = 5 mA	—	0.8	5	ms
Turn-off time	t_{OFF}			—	0.3	1	
Turn-on time	t_{ON}		See Fig. 11.1. R_L = 200 Ω, V_{DD} = 20 V, I_F = 10 mA	—	0.4	3	
Turn-off time	t_{OFF}			—	0.3	1	

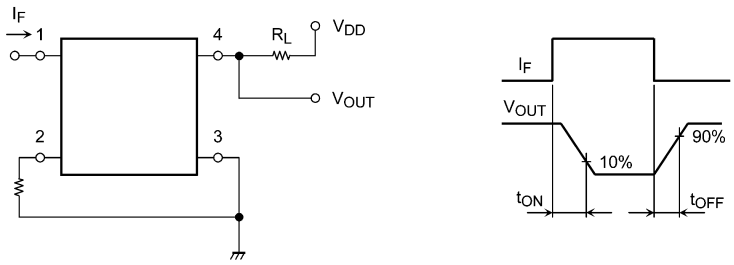

Fig. 11.1 Switching Time Test Circuit

12. Characteristics Curves and Circuit Connections

12.1. Characteristics Curves (Note)

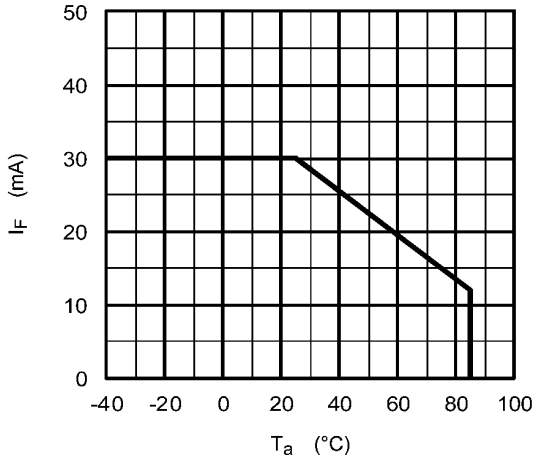

Fig. 12.1.1 I_F - T_a

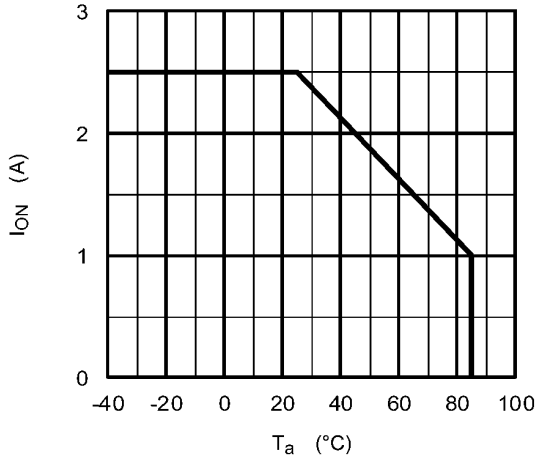

Fig. 12.1.2 I_{ON} - T_a

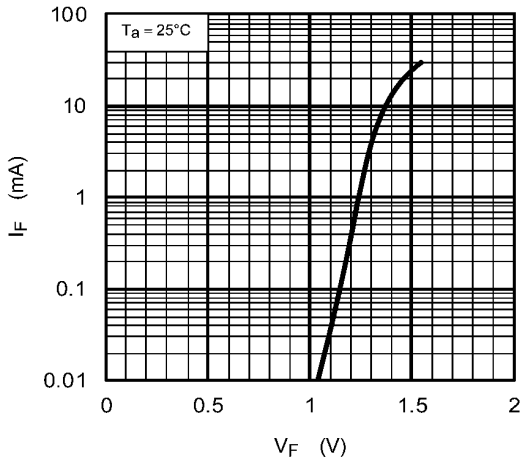

Fig. 12.1.3 I_F - V_F

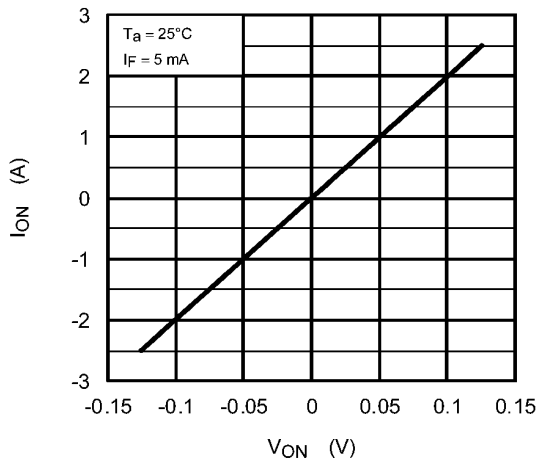

Fig. 12.1.4 I_{ON} - V_{ON}

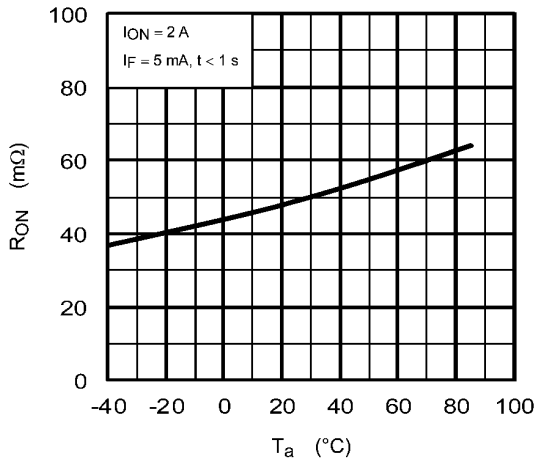

Fig. 12.1.5 R_{ON} - T_a

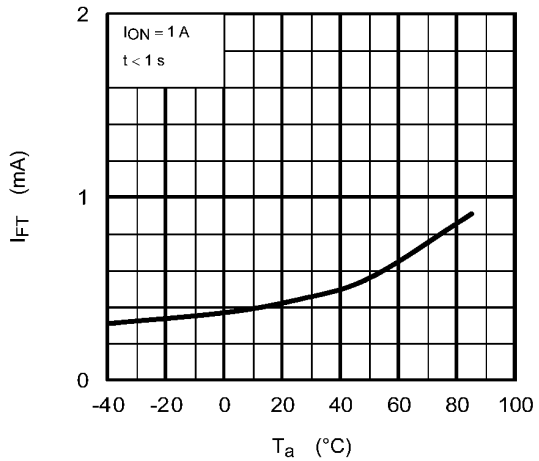

Fig. 12.1.6 I_{FT} - T_a

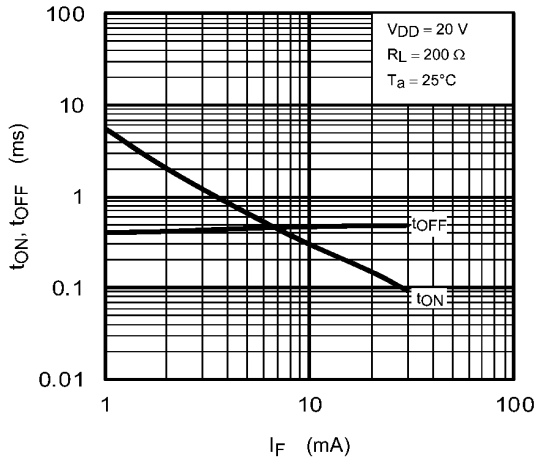

Fig. 12.1.7 t_{on}, t_{off} - I_F

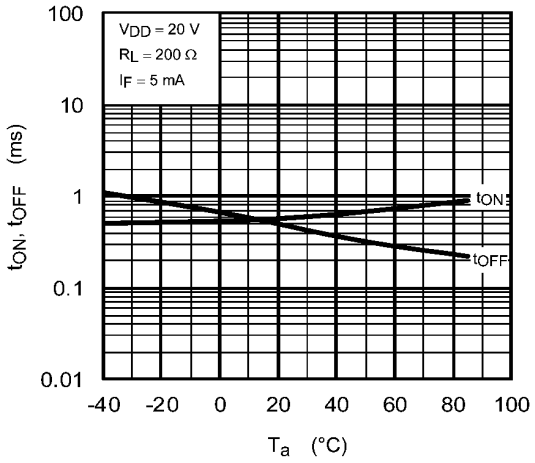

Fig. 12.1.8 t_{on}, t_{off} - T_a

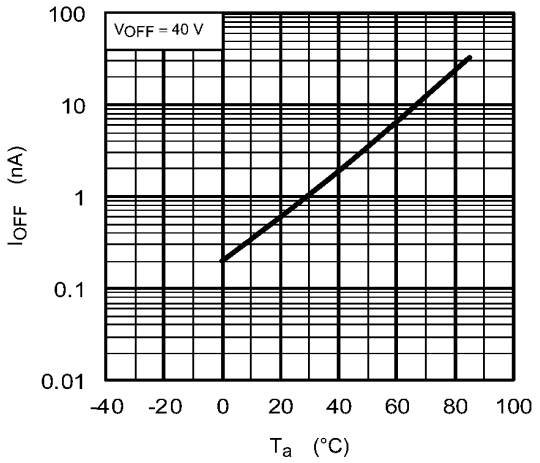

Fig. 12.1.9 I_{OFF} - T_a

Note: The above characteristics curves are presented for reference only and not guaranteed by production test, unless otherwise noted.

Package Dimensions

Unit: mm

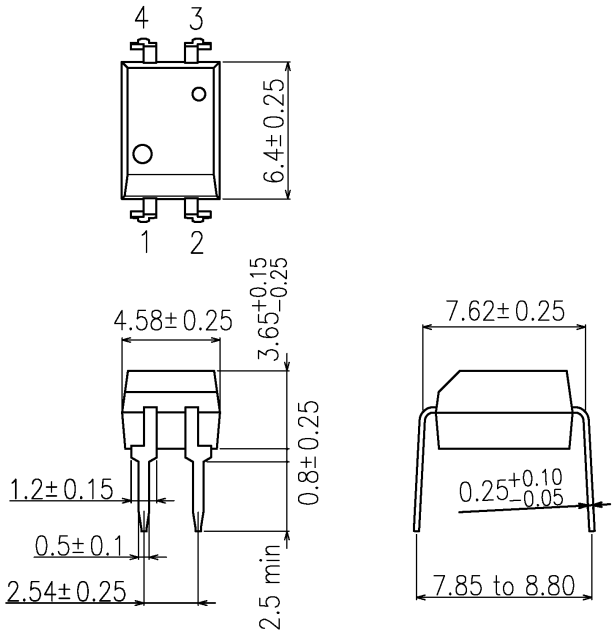

Weight: 0.26 g (typ.)

Package Name(s)
TOSHIBA: 11-5B2S

RESTRICTIONS ON PRODUCT USE

- Toshiba Corporation, and its subsidiaries and affiliates (collectively "TOSHIBA"), reserve the right to make changes to the information in this document, and related hardware, software and systems (collectively "Product") without notice.
- This document and any information herein may not be reproduced without prior written permission from TOSHIBA. Even with TOSHIBA's written permission, reproduction is permissible only if reproduction is without alteration/omission.
- Though TOSHIBA works continually to improve Product's quality and reliability, Product can malfunction or fail. Customers are responsible for complying with safety standards and for providing adequate designs and safeguards for their hardware, software and systems which minimize risk and avoid situations in which a malfunction or failure of Product could cause loss of human life, bodily injury or damage to property, including data loss or corruption. Before customers use the Product, create designs including the Product, or incorporate the Product into their own applications, customers must also refer to and comply with (a) the latest versions of all relevant TOSHIBA information, including without limitation, this document, the specifications, the data sheets and application notes for Product and the precautions and conditions set forth in the "TOSHIBA Semiconductor Reliability Handbook" and (b) the instructions for the application with which the Product will be used with or for. Customers are solely responsible for all aspects of their own product design or applications, including but not limited to (a) determining the appropriateness of the use of this Product in such design or applications; (b) evaluating and determining the applicability of any information contained in this document, or in charts, diagrams, programs, algorithms, sample application circuits, or any other referenced documents; and (c) validating all operating parameters for such designs and applications. **TOSHIBA ASSUMES NO LIABILITY FOR CUSTOMERS' PRODUCT DESIGN OR APPLICATIONS.**
- Product is intended for use in general electronics applications (e.g., computers, personal equipment, office equipment, measuring equipment, industrial robots and home electronics appliances) or for specific applications as expressly stated in this document. Product is neither intended nor warranted for use in equipment or systems that require extraordinarily high levels of quality and/or reliability and/or a malfunction or failure of which may cause loss of human life, bodily injury, serious property damage or serious public impact ("Unintended Use"). Unintended Use includes, without limitation, equipment used in nuclear facilities, equipment used in the aerospace industry, medical equipment, equipment used for automobiles, trains, ships and other transportation, traffic signaling equipment, equipment used to control combustions or explosions, safety devices, elevators and escalators, devices related to electric power, and equipment used in finance-related fields. Do not use Product for Unintended Use unless specifically permitted in this document.
- Do not disassemble, analyze, reverse-engineer, alter, modify, translate or copy Product, whether in whole or in part.
- Product shall not be used for or incorporated into any products or systems whose manufacture, use, or sale is prohibited under any applicable laws or regulations.
- The information contained herein is presented only as guidance for Product use. No responsibility is assumed by TOSHIBA for any infringement of patents or any other intellectual property rights of third parties that may result from the use of Product. No license to any intellectual property right is granted by this document, whether express or implied, by estoppel or otherwise.
- **ABSENT A WRITTEN SIGNED AGREEMENT, EXCEPT AS PROVIDED IN THE RELEVANT TERMS AND CONDITIONS OF SALE FOR PRODUCT, AND TO THE MAXIMUM EXTENT ALLOWABLE BY LAW, TOSHIBA (1) ASSUMES NO LIABILITY WHATSOEVER, INCLUDING WITHOUT LIMITATION, INDIRECT, CONSEQUENTIAL, SPECIAL, OR INCIDENTAL DAMAGES OR LOSS, INCLUDING WITHOUT LIMITATION, LOSS OF PROFITS, LOSS OF OPPORTUNITIES, BUSINESS INTERRUPTION AND LOSS OF DATA, AND (2) DISCLAIMS ANY AND ALL EXPRESS OR IMPLIED WARRANTIES AND CONDITIONS RELATED TO SALE, USE OF PRODUCT, OR INFORMATION, INCLUDING WARRANTIES OR CONDITIONS OF MERCHANTABILITY, FITNESS FOR A PARTICULAR PURPOSE, ACCURACY OF INFORMATION, OR NONINFRINGEMENT.**
- GaAs (Gallium Arsenide) is used in Product. GaAs is harmful to humans if consumed or absorbed, whether in the form of dust or vapor. Handle with care and do not break, cut, crush, grind, dissolve chemically or otherwise expose GaAs in Product.
- Do not use or otherwise make available Product or related software or technology for any military purposes, including without limitation, for the design, development, use, stockpiling or manufacturing of nuclear, chemical, or biological weapons or missile technology products (mass destruction weapons). Product and related software and technology may be controlled under the Japanese Foreign Exchange and Foreign Trade Law and the U.S. Export Administration Regulations. Export and re-export of Product or related software or technology are strictly prohibited except in compliance with all applicable export laws and regulations.
- Please contact your TOSHIBA sales representative for details as to environmental matters such as the RoHS compatibility of Product. Please use Product in compliance with all applicable laws and regulations that regulate the inclusion or use of controlled substances, including without limitation, the EU RoHS Directive. TOSHIBA assumes no liability for damages or losses occurring as a result of noncompliance with applicable laws and regulations.