128x160 dots Graphic SGM16012831

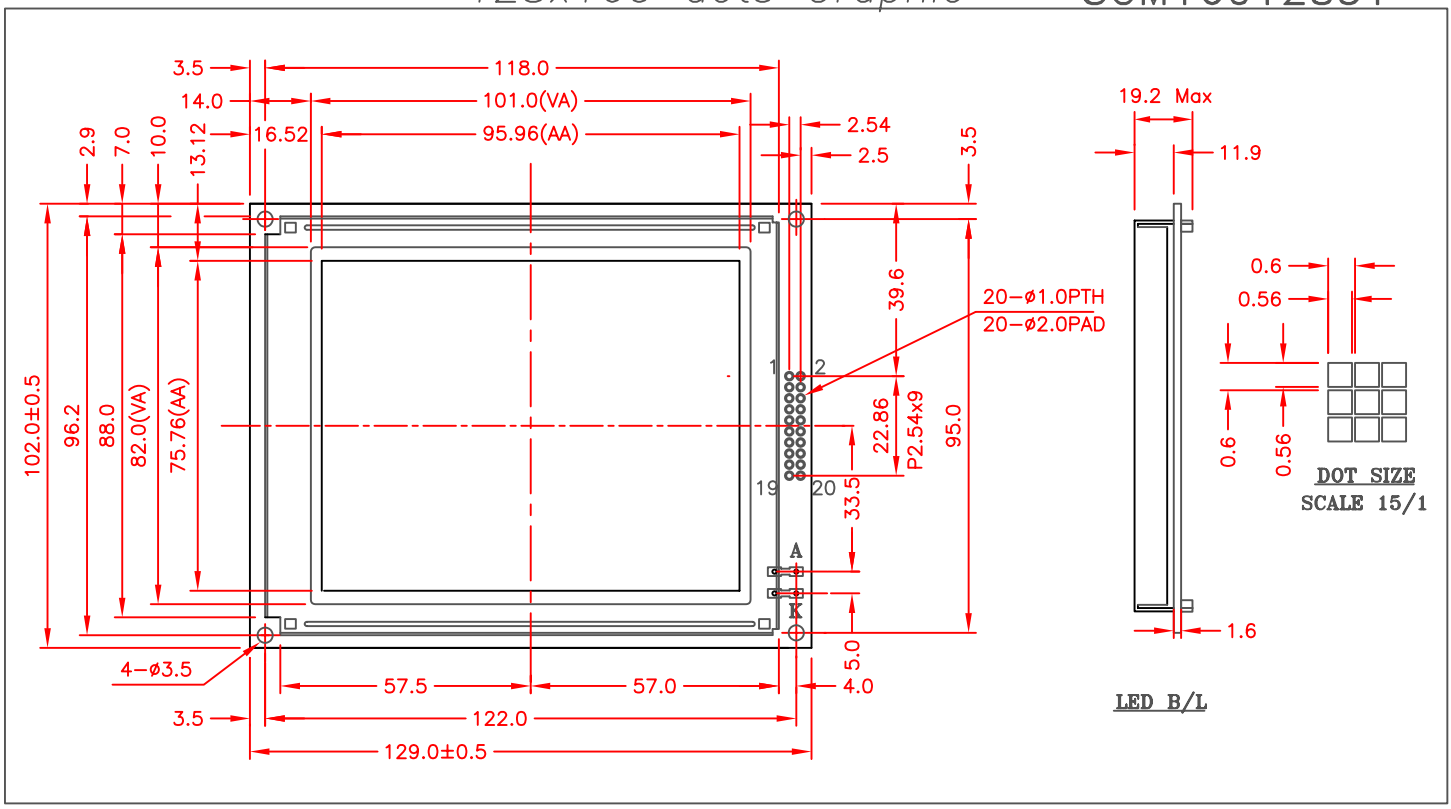

Feature

1. Built−in controller TOSHIBA (T6963C or equivalent)
2. +5V power supply
3. 1/128 duty cycle
4. Optional N/V

Pin Assignment

Pin	Symbol	Function
1	FG	Frame ground
2	Vss	Power Supply (GND)
3	Vdd	Power Supply (+5V)
4	Vadj	Contrast Adjustment
5	Vee	Negative Voltage putput
6	$\overline{WR}$	Data write
7	$\overline{RD}$	Data read
8	$\overline{CE}$	Chip enable
9	C/$\overline{D}$	Command/data read/write
10	$\overline{HALT}$	Clock operating stop signal
11	$\overline{Reset}$	Reset signal
12	DB0	Data bus line
13	DB1	Data bus line
14	DB2	Data bus line
15	DB3	Data bus line
16	DB4	Data bus line
17	DB5	Data bus line
18	DB6	Data bus line
19	DB7	Data bus line
20	NC	No Connection

Mechanical Data

Item	Standard Value	Unit
Module Dimension	129.0 x 102.0	mm
Viewing Area	101.0 x 82.0	mm
Dot Size	0.56 x 0.56	mm
Dot Pitch	0.60 x 0.60	mm
Mounting Hole	122.0 x 96.2	mm

Absolute Maximum Rating

Item	Symbol	Standard Value			Unit
		min.	typ.	max.	
Power Supply	VDD−VSS	4.75	5.0	5.25	V
Input Voltage	VI	−0.3	−−	VDD	V

Note: VSS=0 Volt, VDD=5.0 Volt.

Electronical Characteristics

Item	Symbol	Condition	Standard Value			Unit
			min.	typ.	max.	
Input Voltage	VDD	L level	$0.7V_{DD}$	−−	V_{DD}	V
	VIO	H level	0	−−	$0.3V_{DD}$	V
Supply Current	IDD	VDD=+5V	−−	45	50	mA
Recommended LC Driving Voltage for Normal Temp. Version module	VDD−VO	−20°C	19.9	21.0	22.1	V
		0°C	19.0	−−	21.2	
		25°C	18.6	19.1	19.6	
		50°C	16.2	16.5	16.8	
		70°C	11.6	9.1	12.8	
CCFL Forward Voltage	VF	25°C	−−	256	560	Vms
CCFL Foward Current	IF	25°C	−−	−−	5.0	mA
LED Forward Voltage	VF	25°C	−−	4.6	4.6	V
LED Foward Current	IF	25°C	−−	−−	500	mA

17171 Murphy Ave. Irvine, CA 92614−5915 Tel: 949−417−8070 Fax: 949−417−8075 Web site: www.shellyinc.com

Downloaded from Elcodis.com electronic components distributor