VTB Process Photodiodes

VTB5051B

PACKAGE DIMENSIONS inch (mm)

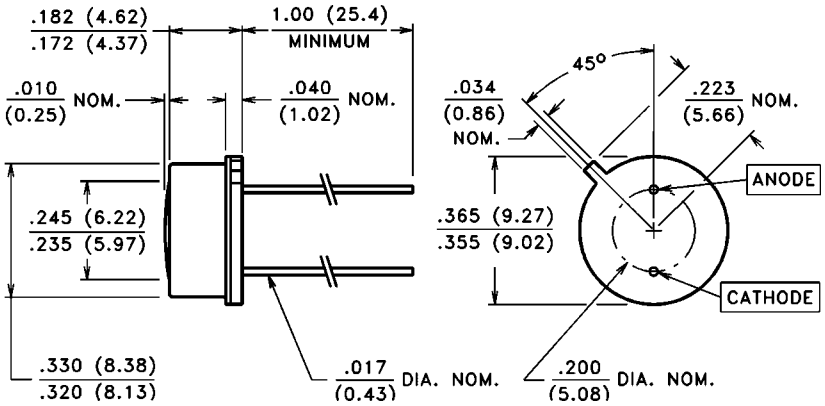

CASE 14 TO-5 HERMETIC
CHIP ACTIVE AREA: .023 in^2 (14.8 mm^2)

PRODUCT DESCRIPTION

Planar silicon photodiode in a "flat" window, dual lead TO-5 package. The package incorporates an infrared rejection filter. Cathode is common to the case. These diodes have very high shunt resistance and have good blue response.

ABSOLUTE MAXIMUM RATINGS

Storage Temperature:	-40°C to 110°C
Operating Temperature:	-40°C to 110°C

ELECTRO-OPTICAL CHARACTERISTICS @ 25°C (See also VTB curves, pages 21-22)

SYMBOL	CHARACTERISTIC	TEST CONDITIONS	VTB5051B			UNITS
			Min.	Typ.	Max.	
I_{SC}	Short Circuit Current	H = 100 fc, 2850 K	8	13		µA
TC I_{SC}	I_{SC} Temperature Coefficient	2850 K		.02	.08	%/°C
V_{OC}	Open Circuit Voltage	H = 100 fc, 2850 K		420		mV
TC V_{OC}	V_{OC} Temperature Coefficient	2850 K		-2.0		mV/°C
I_D	Dark Current	H = 0, VR = 2.0 V			250	pA
R_{SH}	Shunt Resistance	H = 0, V = 10 mV		.56		GΩ
TC R_{SH}	R_{SH} Temperature Coefficient	H = 0, V = 10 mV		-8.0		%/°C
C_J	Junction Capacitance	H = 0, V = 0		3.0		nF
λ_{range}	Spectral Application Range		330		720	nm
λ_p	Spectral Response - Peak			580		nm
V_{BR}	Breakdown Voltage		2	40		V
$\theta_{1/2}$	Angular Resp. - 50% Resp. Pt.			±50		Degrees
NEP	Noise Equivalent Power			3.7×10^{-14} (Typ.)		$W/\sqrt{Hz}$
D*	Specific Detectivity			1.0×10^{13} (Typ.)		$cm\sqrt{Hz}/W$

PerkinElmer Optoelectronics, 10900 Page Ave., St. Louis, MO 63132 USA Phone: 314-423-4900 Fax: 314-423-3956 Web: www.perkinelmer.com/opto

Downloaded from Elcodis.com electronic components distributor