# MCPL-4-9034

## 160 MHz Constant Phase Log Amplifier

LINEARITY (1)

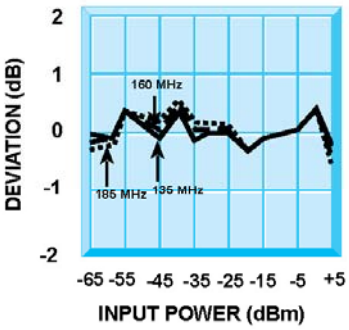


LINEARITY (1)

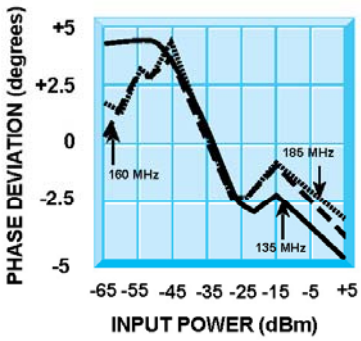


PULSE RESPONSE (+5dBm INPUT)

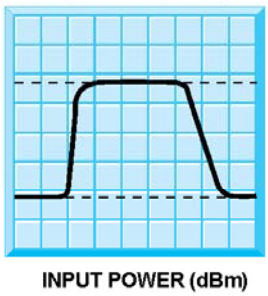


## Guaranteed Specifications (-54° to +85°C)

| | | |
|---|---|---|
| Center Frequency | | 160 MHz |
| Operating Bandwidth | | 50 MHz |
| Dynamic Range | | +5 to -65 dBm |
| Log Linearity(1) | | |
| (-10 to -60 dBm Input) | | ±1 dB |
| (Full Dynamic Range) | | ±1.5 dB |
| Sensitivity (Slope) @ 25°C | | 25 mV/dB |
| Over Temperature | | ±5% Max. |
| Offset Adjustment Range | | ±200 mV Min. |
| Rise Time (10-90%) | | 20 nS Max. |
| Fall Time (90-10%) | | 100 nS Max. |
| Tangential Sensitivity | | -75 dBm Max. |
| Voltage Output Range (nominal) | | 0 to 2.0 V |
| VSWR | Input | 2.0:1 Max. |
| | Output | 2.5:1 Max. |
| Limited IF Output | | -2 ±2 dBm |
| Phase Shift vs Dynamic Range and Frequency | | ±5° Max. |
| DC Power | | +8 to +15 VDC @ 70 mA Max. |
| | | -8 to -15 VDC @ 120 mA Max. |

## Mechanical Outline

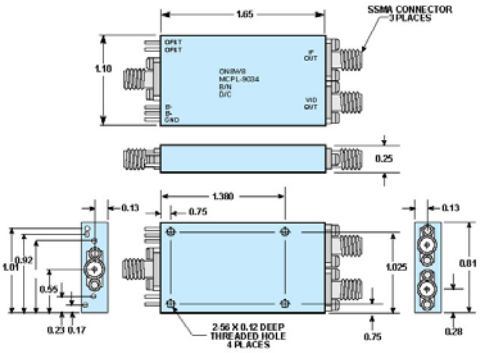


## Operating Characteristics

| | |
|---|---|
| RF Impedance | 50 Ohms Nominal |
| Video Load Impedance | 93 Ohms Nominal |
| RF Input Power | +20 dBm Max. |

STC Microwave Systems – www.craneae.com
28 Tozer Road • Beverly, MA 01915
phone: 978-524-7200 • email: electronics@craneae.com

Revision mcpl-4-9034 2005 08252005

STC MICROWAVE SYSTEMS - OLEKTRON
A CRANE CO. COMPANY
CRANE AEROSPACE & ELECTRONICS

Downloaded from Elcodis.com electronic components distributor