DATA SHEET

74F3037
Quad 2-input NAND 30Ω driver

Product specification 1990 Feb 09

IC15 Data Handbook

Philips
Semiconductors

PHILIPS

Quad 2-input NAND 30Ω driver 74F3037

FEATURES

- 30Ω line driver
- 67mA output drive capability in the high state
- High speed
- Facilitates incident wave switching
- 3nh lead inductance each on V_{CC} and GND when both side pins are used
- 160mA output drive capability in the low state
- Industrial temperature range available (–40°C to +85°C)

DESCRIPTION

The 74F3037 is a high current line driver composed of four 2–input NAND gates. It has been designed to deal with the transmission line effects of PC boards which appear when fast edge rates are used.

The drive capability of the 74F3037 is 67mA source and 160mA sink with a V_{CC} as low as 4.5V. This guarantees incident wave switching with V_{OH} not less than 2.0V and V_{OL} not more than 0.8mA while driving impedances as low as 30 ohms. This is applicable with any combination of outputs using continuous duty. The propagation delay of the part is minimally affected by reflections when terminated only by the TTL inputs of other devices. Performances may be improved by full or partial line termination.

TYPE	TYPICAL PROPAGATION DELAY	TYPICAL SUPPLY CURRENT(TOTAL)
74F3037	2.0ns	16mA

ORDERING INFORMATION

DESCRIPTION	ORDER CODE		PKG DWG #
	COMMERCIAL RANGE V_{CC} = 5V ±10%, T_{amb} = 0°C to +70°C	INDUSTRIAL RANGE V_{CC} = 5V ±10%, T_{amb} = –40°C to +85°C	
16–pin plastic DIP	N74F3037N	I74F3037N	SOT38-4
16–pin plastic SOL	N74F3037D	I74F3037D	SOT162-1

INPUT AND OUTPUT LOADING AND FAN OUT TABLE

PINS	DESCRIPTION	74F (U.L.) HIGH/LOW	LOAD VALUE HIGH/LOW
Dna, Dnb	Data inputs	1.0/1.0	20µA/0.6mA
$\overline{Q}$n	Data output	3350/266	67mA/160mA

Note to input and output loading and fan out table

One (1.0) FAST unit load is defined as: 20µA in the high state and 0.6mA in the low state.

LOGIC DIAGRAM

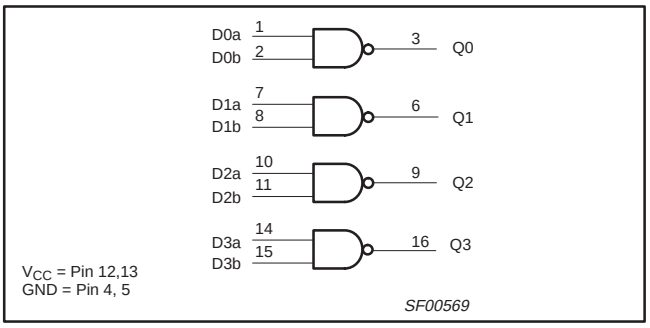

FUNCTION TABLE

INPUTS		OUTPUT
Dna	Dnb	$\overline{Q}$n
L	L	H
L	H	H
H	L	H
H	H	L

Notes to function table

H = High voltage level

L = Low voltage level

PIN CONFIGURATION

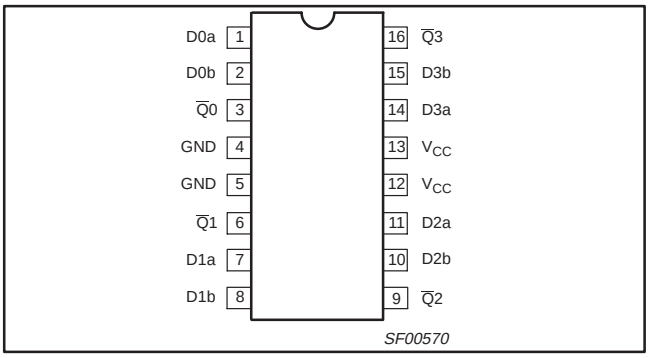

IEC/IEEE SYMBOL

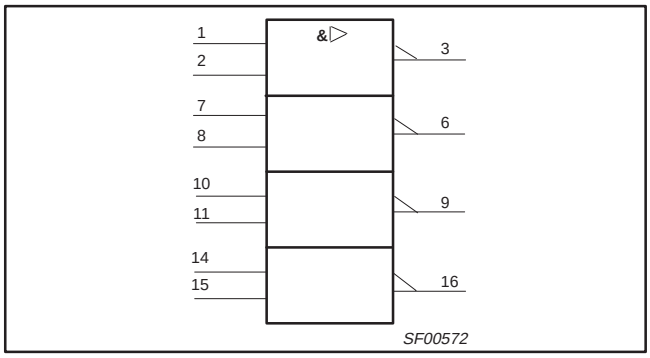

LOGIC SYMBOL

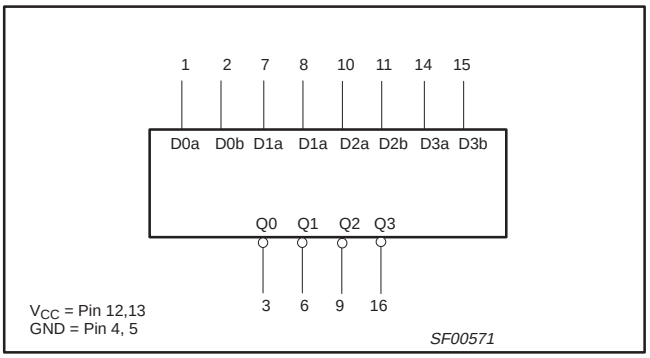

ABSOLUTE MAXIMUM RATINGS

(Operation beyond the limit set forth in this table may impair the useful life of the device. Unless otherwise noted these limits are over the operating free air temperature range.)

SYMBOL	PARAMETER		RATING	UNIT
V_{CC}	Supply voltage		–0.5 to +7.0	V
V_{IN}	Input voltage		–0.5 to +7.0	V
I_{IN}	Input current		–30 to +5	mA
V_{OUT}	Voltage applied to output in high output state		–0.5 to V_{CC}	V
I_{OUT}	Current applied to output in low output state		320	mA
T_{amb}	Operating free air temperature range	Commercial range	0 to +70	°C
		Industrial range	–40 to +85	°C
T_{stg}	Storage temperature range		–65 to +150	°C

RECOMMENDED OPERATING CONDITIONS

SYMBOL UNIT	PARAMETER		LIMITS MIN	NOM	MAX	T_A = –40 to +85°C
V_{CC}	Supply voltage		4.5	5.0	5.5	V
V_{IH}	High–level input voltage		2.4			V
V_{IL}	Low–level input voltage				0.8	V
I_{Ik}	Input clamp current				–18	mA
I_{OH}	High–level output current				–67	mA
I_{OL}	Low–level output current				160	mA
T_{amb}	Operating free air temperature range	Commercial range	0		+70	°C
		Industrial range	–40		+85	°C

DC ELECTRICAL CHARACTERISTICS

(Over recommended operating free-air temperature range unless otherwise noted.)

SYMBOL	PARAMETER		TEST CONDITIONS[1]			LIMITS MIN	TYP[2]	MAX	UNIT
V_{OH}	High–level output voltage		V_{CC} = MIN, V_{IL} = MAX, V_{IH} = MIN	I_{OH} = –45mA	±10%V_{CC}	2.5			V
					±5%V_{CC}	2.7			V
				I_{OH1} = –67mA[3]	±10%V_{CC}	2.0			V
V_{OL}	Low–level output voltage		V_{CC} = MIN, V_{IL} = MAX, V_{IH} = MIN	I_{OL} = 100mA	±10%V_{CC}		0.30	0.50	V
				I_{OL1} = 160mA[4]	±5%V_{CC}		0.30	0.50	V
V_{IK}	Input clamp voltage		V_{CC} = MIN, I_I = I_{IK}				-0.73	-1.2	V
I_I	Input current at maximum input voltage		V_{CC} = MAX, V_I = 7.0V					100	µA
I_{IH}	High–level input current		V_{CC} = MAX, V_I = 2.7V					20	µA
I_{IL}	Low–level input current		V_{CC} = MAX, V_I = 0.5V					-0.6	mA
I_O	Output current[5]		V_{CC} = MAX, V_O = 2.25V			-100		-200	mA
I_{CC}	Supply current (total)	I_{CCH}	V_{CC} = MAX				6.0	9.0	mA
		I_{CCL}					30	40	mA

Notes to DC electrical characteristics

1. For conditions shown as MIN or MAX, use the appropriate value specified under recommended operating conditions for the applicable type.
2. All typical values are at V_{CC} = 5V, T_{amb} = 25°C.
3. I_{OH1} is the current necessary to guarantee the low to high transition in a 30 ohm transmission line on the incident wave.
4. I_{OL1} is the current necessary to guarantee the high to low transition in a 30 ohm transmission line on the incident wave.
5. I_O is tested under conditions that produce current approximately one half of the true short–circuit current (I_{OS}).

AC ELECTRICAL CHARACTERISTICS

SYMBOL	PARAMETER	TEST CONDITION	LIMITS T_{amb} = +25°C, V_{CC} = +5.0V, C_L = 50pF, R_L = 500Ω MIN	TYP	MAX	T_{amb} = 0°C to +70°C, V_{CC} = +5.0V ± 10%, C_L = 50pF, R_L = 500Ω MIN	MAX	T_{amb} =–40°C to +85°C, V_{CC} = +5.0V ± 10%, C_L = 50pF, R_L = 500Ω MIN	MAX	UNIT
t_{PLH}	Propagation delay Dna, Dnb to $\overline{Q}$n	Waveform 1	1.0	2.0	5.0	1.0	5.5	1.0	5.5	ns
t_{PHL}			1.0	2.0	4.5	1.0	5.0	1.0	5.0	

AC WAVEFORMS

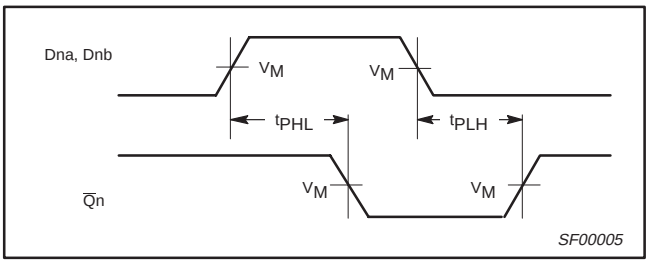

Waveform 1. Propagation delay for inverting outputs

Note to AC waveforms
For all waveforms, V_M = 1.5V.

TEST CIRCUIT AND WAVEFORMS

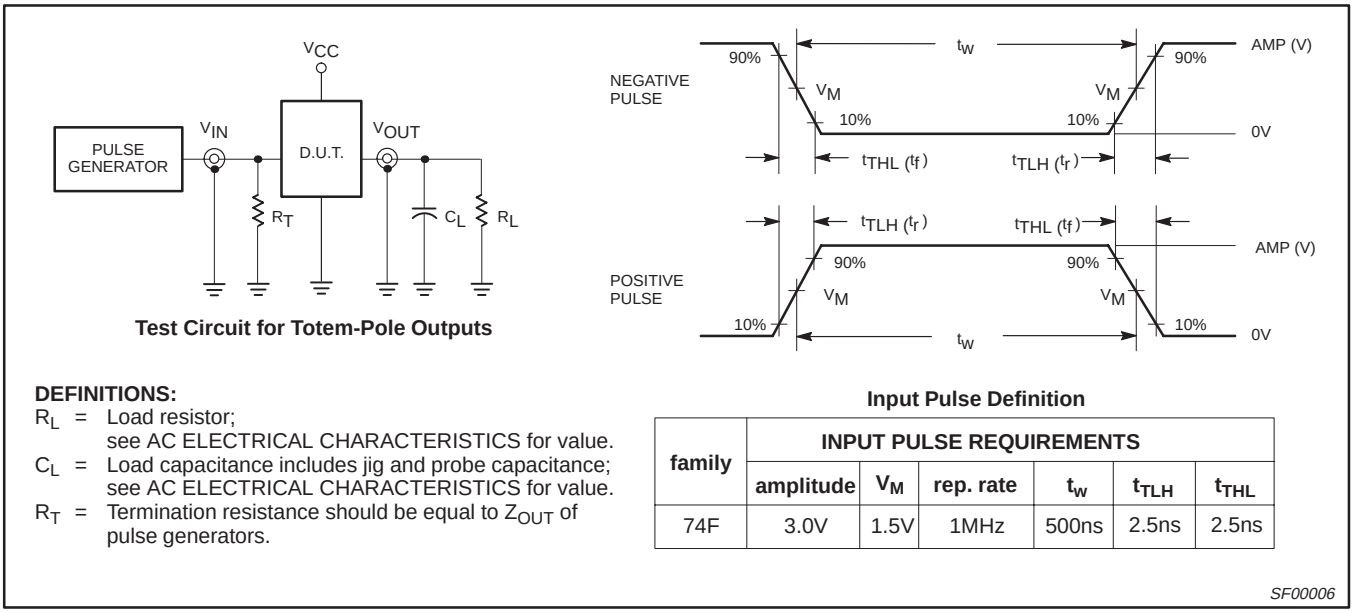

Test Circuit for Totem-Pole Outputs

DEFINITIONS:

R_L = Load resistor; see AC ELECTRICAL CHARACTERISTICS for value.
C_L = Load capacitance includes jig and probe capacitance; see AC ELECTRICAL CHARACTERISTICS for value.
R_T = Termination resistance should be equal to Z_{OUT} of pulse generators.

Input Pulse Definition

family	INPUT PULSE REQUIREMENTS					
	amplitude	V_M	rep. rate	t_w	t_{TLH}	t_{THL}
74F	3.0V	1.5V	1MHz	500ns	2.5ns	2.5ns

DIP16: plastic dual in-line package; 16 leads (300 mil) SOT38-4

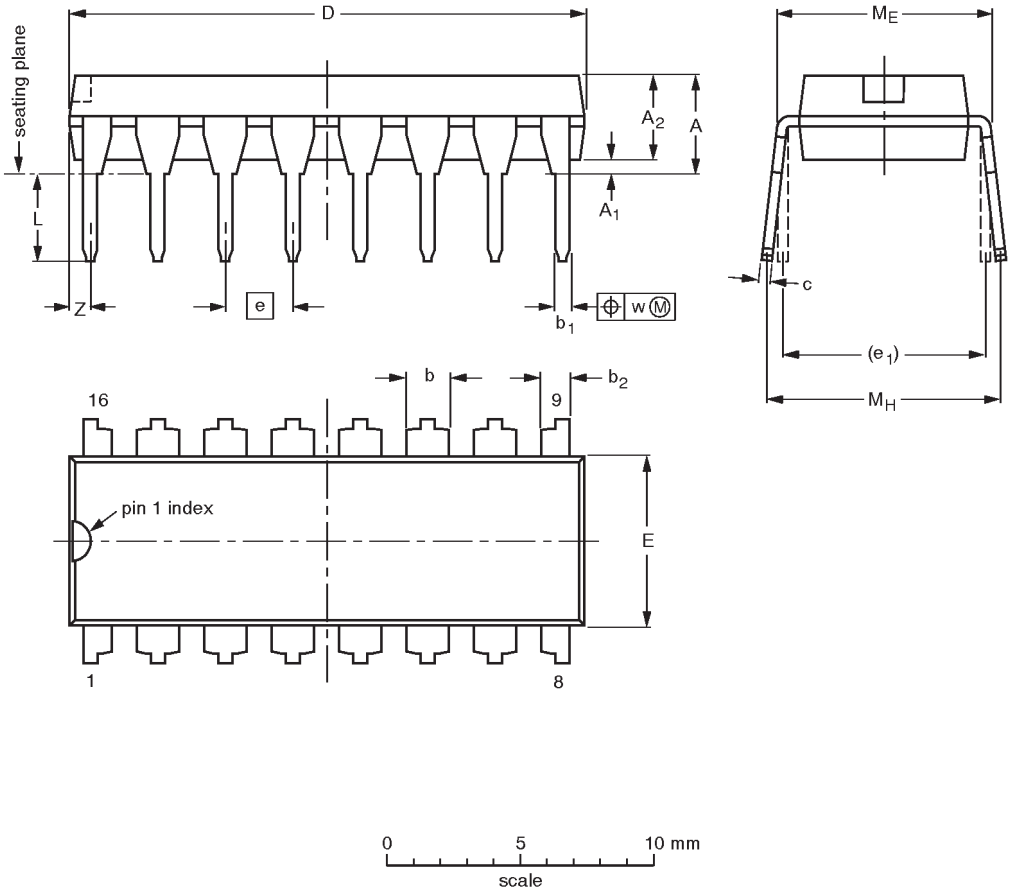

DIMENSIONS (inch dimensions are derived from the original mm dimensions)

UNIT	A max.	A_1 min.	A_2 max.	b	b_1	b_2	c	D (1)	E (1)	e	e_1	L	M_E	M_H	w	Z (1) max.
mm	4.2	0.51	3.2	1.73 1.30	0.53 0.38	1.25 0.85	0.36 0.23	19.50 18.55	6.48 6.20	2.54	7.62	3.60 3.05	8.25 7.80	10.0 8.3	0.254	0.76
inches	0.17	0.020	0.13	0.068 0.051	0.021 0.015	0.049 0.033	0.014 0.009	0.77 0.73	0.26 0.24	0.10	0.30	0.14 0.12	0.32 0.31	0.39 0.33	0.01	0.030

Note

1. Plastic or metal protrusions of 0.25 mm maximum per side are not included.

OUTLINE VERSION	REFERENCES				EUROPEAN PROJECTION	ISSUE DATE
	IEC	JEDEC	EIAJ			
SOT38-4						~~92-11-17~~ 95-01-14

SO16: plastic small outline package; 16 leads; body width 7.5 mm SOT162-1

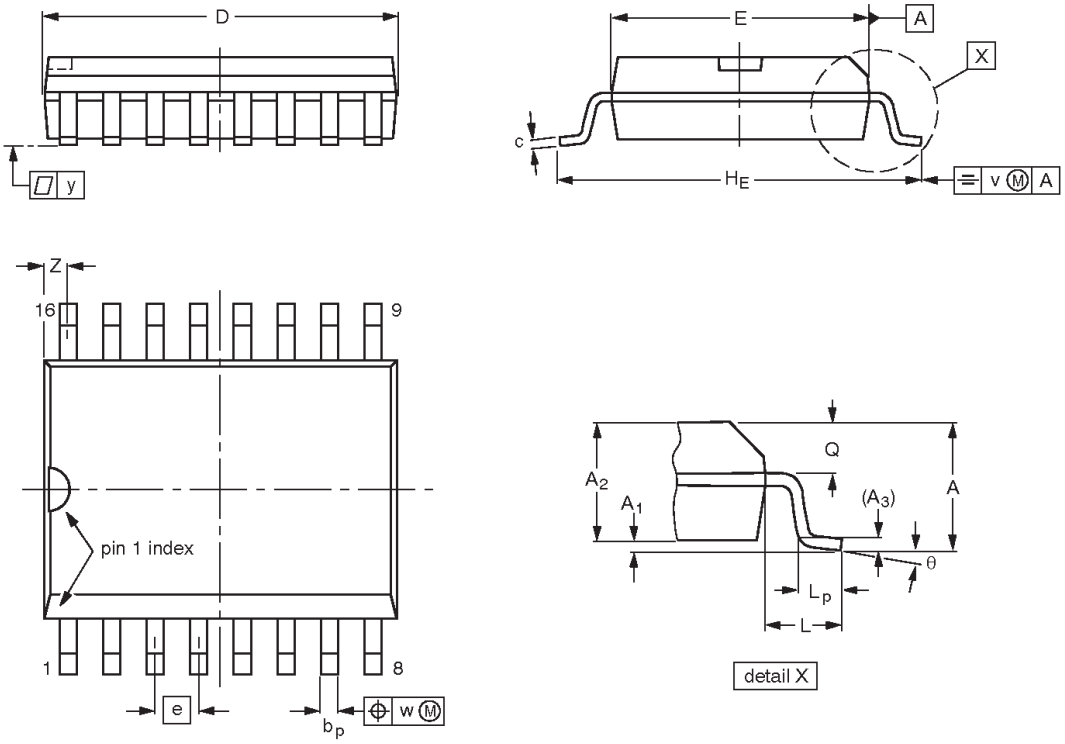

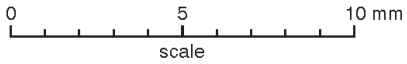

DIMENSIONS (inch dimensions are derived from the original mm dimensions)

UNIT	A max.	A_1	A_2	A_3	b_p	c	D (1)	E (1)	e	H_E	L	L_p	Q	v	w	y	Z (1)	θ
mm	2.65	0.30 0.10	2.45 2.25	0.25	0.49 0.36	0.32 0.23	10.5 10.1	7.6 7.4	1.27	10.65 10.00	1.4	1.1 0.4	1.1 1.0	0.25	0.25	0.1	0.9 0.4	8° 0°
inches	0.10	0.012 0.004	0.096 0.089	0.01	0.019 0.014	0.013 0.009	0.41 0.40	0.30 0.29	0.050	0.419 0.394	0.055	0.043 0.016	0.043 0.039	0.01	0.01	0.004	0.035 0.016	

Note

1. Plastic or metal protrusions of 0.15 mm maximum per side are not included.

OUTLINE VERSION	REFERENCES				EUROPEAN PROJECTION	ISSUE DATE
	IEC	JEDEC	EIAJ			
SOT162-1	075E03	MS-013AA				~~95-01-24~~ 97-05-22

Data sheet status

Data sheet status	Product status	Definition [1]
Objective specification	Development	This data sheet contains the design target or goal specifications for product development. Specification may change in any manner without notice.
Preliminary specification	Qualification	This data sheet contains preliminary data, and supplementary data will be published at a later date. Philips Semiconductors reserves the right to make chages at any time without notice in order to improve design and supply the best possible product.
Product specification	Production	This data sheet contains final specifications. Philips Semiconductors reserves the right to make changes at any time without notice in order to improve design and supply the best possible product.

[1] Please consult the most recently issued datasheet before initiating or completing a design.

Definitions

Short-form specification — The data in a short-form specification is extracted from a full data sheet with the same type number and title. For detailed information see the relevant data sheet or data handbook.

Limiting values definition — Limiting values given are in accordance with the Absolute Maximum Rating System (IEC 134). Stress above one or more of the limiting values may cause permanent damage to the device. These are stress ratings only and operation of the device at these or at any other conditions above those given in the Characteristics sections of the specification is not implied. Exposure to limiting values for extended periods may affect device reliability.

Application information — Applications that are described herein for any of these products are for illustrative purposes only. Philips Semiconductors make no representation or warranty that such applications will be suitable for the specified use without further testing or modification.

Disclaimers

Life support — These products are not designed for use in life support appliances, devices or systems where malfunction of these products can reasonably be expected to result in personal injury. Philips Semiconductors customers using or selling these products for use in such applications do so at their own risk and agree to fully indemnify Philips Semiconductors for any damages resulting from such application.

Right to make changes — Philips Semiconductors reserves the right to make changes, without notice, in the products, including circuits, standard cells, and/or software, described or contained herein in order to improve design and/or performance. Philips Semiconductors assumes no responsibility or liability for the use of any of these products, conveys no license or title under any patent, copyright, or mask work right to these products, and makes no representations or warranties that these products are free from patent, copyright, or mask work right infringement, unless otherwise specified.

Philips Semiconductors
811 East Arques Avenue
P.O. Box 3409
Sunnyvale, California 94088–3409
Telephone 800-234-7381

print code Date of release: 10-98

Document order number: 9397-750-05203

Let's make things better.

Philips Semiconductors

PHILIPS