Ferrites and accessories

PS 68 × 14.5
Core and accessories

Series/Type: **B65928, B65946**
Date: September 2006

© EPCOS AG 2006. Reproduction, publication and dissemination of this data sheet and the information contained therein without EPCOS' prior express consent is prohibited.

Core

- To IEC 62323
- Recommended for new designs
- For inductive proximity switches
- Material N22 for the frequency range from about 20 to 200 kHz

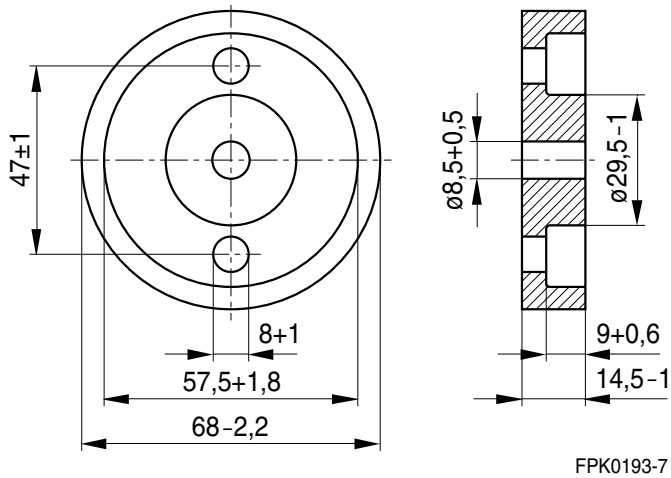

Material	Approx. weight g	Ordering code
N22	130	B65928A0000X022

Coil former

Material: GFR polyterephthalate (UL 94 V-0, insulation class to IEC 60085: F ≙ max. operating temperature 155 °C), color code black Valox 420-SE0® [E45329 (M)], GE PLASTICS B V

A_N mm^2	l_N mm	A_R value µΩ	Ordering code
77	140	62	B65946B0000T001

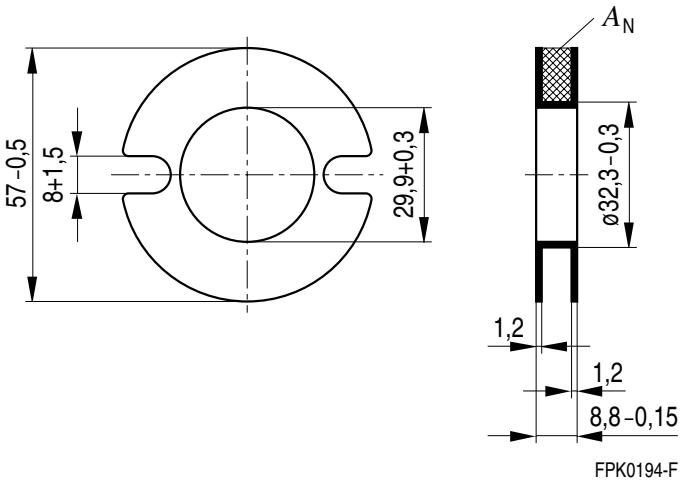

Mechanical stress and mounting

Ferrite cores have to meet mechanical requirements during assembling and for a growing number of applications. Since ferrites are ceramic materials one has to be aware of the special behavior under mechanical load.

As valid for any ceramic material, ferrite cores are brittle and sensitive to any shock, fast changing or tensile load. Especially high cooling rates under ultrasonic cleaning and high static or cyclic loads can cause cracks or failure of the ferrite cores.

For detailed information see Data Book 2007, chapter “General – Definitions, 8.1”.

Effects of core combination on A_L value

Stresses in the core affect not only the mechanical but also the magnetic properties. It is apparent that the initial permeability is dependent on the stress state of the core. The higher the stresses are in the core, the lower is the value for the initial permeability. Thus the embedding medium should have the greatest possible elasticity.

For detailed information see Data Book 2007, chapter “General – Definitions, 8.2”.

Heating up

Ferrites can run hot during operation at higher flux densities and higher frequencies.

NiZn-materials

The magnetic properties of NiZn-materials can change irreversible in high magnetic fields.

Processing notes

– The start of the winding process should be soft. Else the flanges may be destroid.

– To strong winding forces may blast the flanges or squeeze the tube that the cores can no more be mount.

– To long soldering time at high temperature (>300 °C) may effect coplanarity or pin arrangement.

– Not following the processing notes for soldering of the J-leg terminals may cause solderability problems at the transformer because of pollution with Sn oxyd of the tin bath or burned insulation of the wire. For detailed information see Data Book 2007, chapter “Processing notes, 2.2”.

– The dimensions of the hole arrangement have fixed values and should be understood as a recommendation for drilling the printed circuit board. For dimensioning the pins, the group of holes can only be seen under certain conditions, as they fit into the given hole arrangement. To avoid problems when mounting the transformer, the manufacturing tolerances for positioning the customers’ drilling process must be considered by increasing the hole diameter.

Important notes

The following applies to all products named in this publication:

1. Some parts of this publication contain **statements about the suitability of our products for certain areas of application**. These statements are based on our knowledge of typical requirements that are often placed on our products in the areas of application concerned. We nevertheless expressly point out **that such statements cannot be regarded as binding statements about the suitability of our products for a particular customer application.** As a rule, EPCOS is either unfamiliar with individual customer applications or less familiar with them than the customers themselves. For these reasons, it is always ultimately incumbent on the customer to check and decide whether an EPCOS product with the properties described in the product specification is suitable for use in a particular customer application.
2. We also point out that **in individual cases, a malfunction of passive electronic components or failure before the end of their usual service life cannot be completely ruled out in the current state of the art, even if they are operated as specified.** In customer applications requiring a very high level of operational safety and especially in customer applications in which the malfunction or failure of a passive electronic component could endanger human life or health (e.g. in accident prevention or life-saving systems), it must therefore be ensured by means of suitable design of the customer application or other action taken by the customer (e.g. installation of protective circuitry or redundancy) that no injury or damage is sustained by third parties in the event of malfunction or failure of a passive electronic component.
3. **The warnings, cautions and product-specific notes must be observed**.
4. In order to satisfy certain technical requirements, **some of the products described in this publication may contain substances subject to restrictions in certain jurisdictions (e.g. because they are classed as "hazardous")**. Useful information on this will be found in our Material Data Sheets on the Internet (www.epcos.com/material). Should you have any more detailed questions, please contact our sales offices.
5. We constantly strive to improve our products. Consequently, **the products described in this publication may change from time to time**. The same is true of the corresponding product specifications. Please check therefore to what extent product descriptions and specifications contained in this publication are still applicable before or when you place an order.

   We also **reserve the right to discontinue production and delivery of products**. Consequently, we cannot guarantee that all products named in this publication will always be available.
6. Unless otherwise agreed in individual contracts, **all orders are subject to the current version of the "General Terms of Delivery for Products and Services in the Electrical Industry" published by the German Electrical and Electronics Industry Association (ZVEI)**.
7. The trade names EPCOS, EPCOS-JONES, Baoke, Alu-X, CeraDiode, CSSP, MLSC, PhaseCap, PhaseMod, SIFI, SIFERRIT, SIKOREL, SilverCap, SIMID, SIOV, SIP5D, SIP5K, UltraCap, WindCap are **trademarks registered or pending** in Europe and in other countries. Further information will be found on the Internet at www.epcos.com/trademarks.