STRAIGHT LEAD T-1¾ ULTRA BRIGHT LED LAMPS

T-41-21

APPLICATIONS

- PANEL CIRCUIT INDICATOR
- LIGHTED SWITCHES
- BAR CODE SCANNER
- MEASURING EQUIPMENT

FEATURES

- Ultra bright.
- All plastic mold type.
- Colorless clear lens.
- Low drive current, high intensity red light emission.
- Excellent on/off contrast ratio.
- Fast response time, capable of pulse operation.

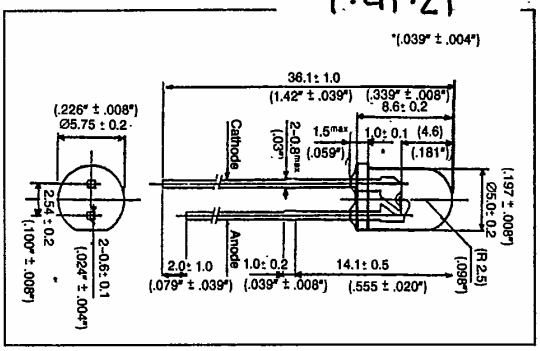

MAXIMUM RATINGS (Ta = 25°C)

PART NO.	FORWARD CURRENT (I_F) (mA)	REVERSE VOLTAGE (V_R) (V)	POWER DISSIPATION (P_D) (mW)	OPERATING TEMPERATURE (T_{opr}) (°C)	STORAGE TEMPERATURE (T_{stg}) (°C)
MT150F-URC	50	3	100	-20 ~ 80	-30 ~ 100
MT150F-URB	50	3	100	-20 ~ 80	-30 ~ 100
MT150F-URA	50	3	100	-20 ~ 80	-30 ~ 100

OPTO-ELECTRICAL CHARACTERISTICS (Ta = 25°C)

PART NO.	MATERIAL	LENS COLOR	VIEWING ANGLE	LUMINOUS INTENSITY (mcd)				FORWARD VOLTAGE (v)			REVERSE CURRENT		PEAK WAVELENGTH	SPEC. LINE HALF WIDTH
			typ.	min.	typ.	max.	@mA	typ.	max.	@ mA	μA	Vr	nm	nm
MT150F-URC	GaAlAs	Water/Clear	30°	3200	4000	5000	20	1.8	2.4	20	100	3	660	25
MT150F-URB	GaAlAs	Water/Clear	30°	1600	2300	3200	20	1.8	2.4	20	100	3	660	25
MT150F-URA	GaAlAs	Water/Clear	30°	800	1100	1600	20	1.8	2.4	20	100	3	660	25

Downloaded from Elcodis.com electronic components distributor