40 X 4 LCD Character Module
FEMA P/N: CM4048

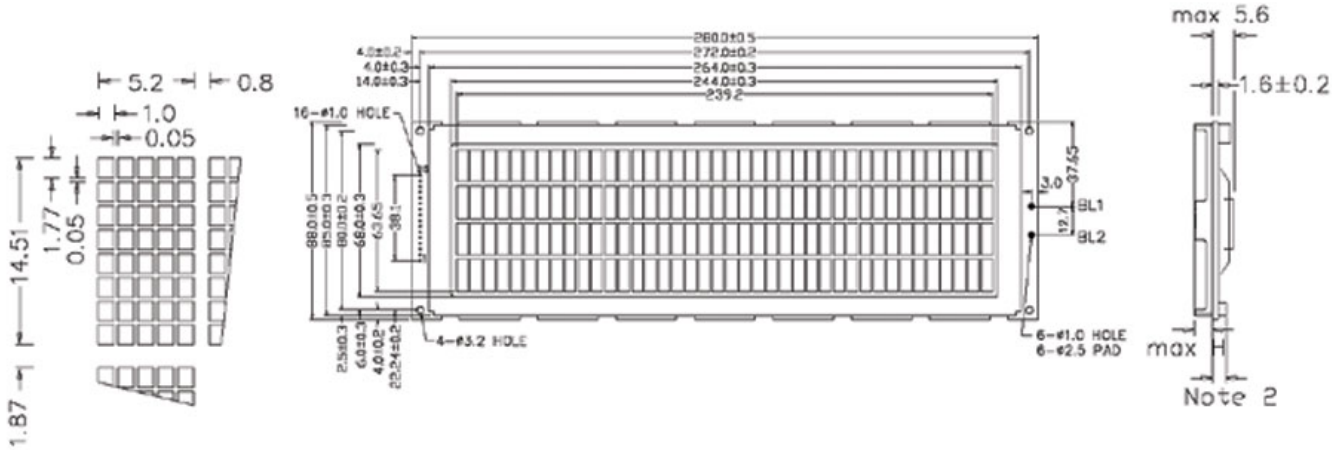

NOTE 1	NOTE 2
NV (Negative Voltage Only)	t=7.6
TC (Temperature Compensation Only)	ditto
NT (NV+TC)	ditto

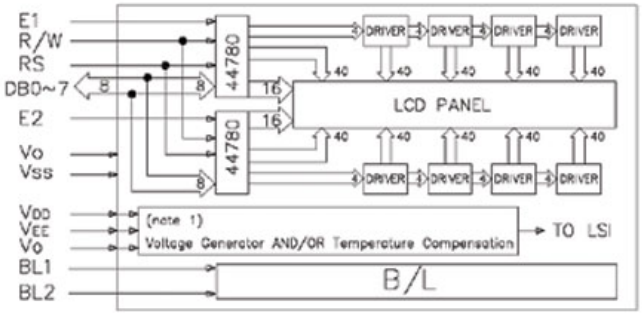

MODULE	H
EL	5.3
LED SMT	10.7

Unit:mm

LC4042 \ INTERFACE PIN				1	2	3	4	5	6	7	8	9	10	11	12	13	14	15	16	BL1	BL2
(EL)	* (NV)	** (TC)	*** (NT)	Vss	Vdd	Vo	RS	R/W	E1	DB0	DB1	DB2	DB3	DB4	DB5	DB6	DB7	E2	N/A	EL	EL
(LED-SMT)	* (NV)	** (TC)	*** (NT)	ditto																LED(+)	LED(-)

Downloaded from Elcodis.com electronic components distributor