Dual Channel Thermopile TPS 2534

DATASHEET

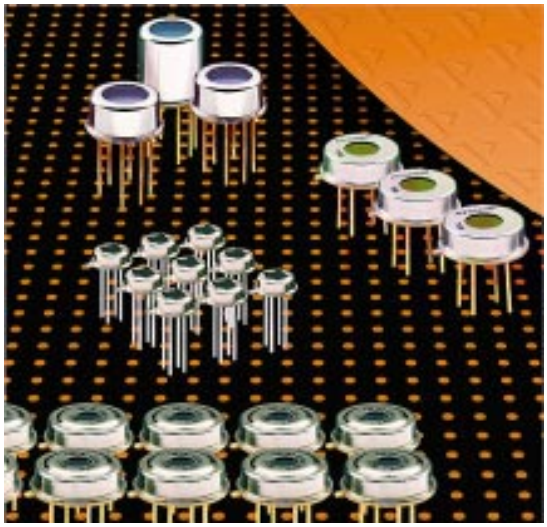

Two thermopiles with individual infrared filters

Thermistor temperature reference included

Applications: infrared absorption (NDIR) gas sensing with reference channel

The dual thermopile sensor **TPS 2534** employs two single thermopile chips mounted in a TO 5-type housing with a 30 kΩ thermistor as temperature reference. The cap has two windows of size 2.3 x 2.6 mm² each which can be equipped with different infrared bandpass filters. The sensor is perfectly suited to gas detection by IR absorption.
For further information please refer to the TPS 2534 product note.

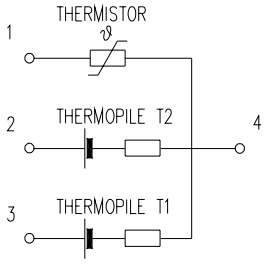

Parameters		TPS 2534 typical		units	condition
Sensitive area	2x	1.2 x 1.2		mm²	absorbing area
Window size		2.3 x 2.6		mm²	each channel
DC sensitivity		42		V/W	500K BB w/o filter
Resistance		30		kΩ	
Noise		30		nV/√Hz	r.m.s. 300K
NEP		10.7		nW/√Hz	500K BB w/o filter
D*		2.3 x10⁸		cm√Hz/W	500K BB w/o filter
TC of sensitivity		-0.01		%/K	
TC of resistance		0.02		%/K	
Time constant		35		ms	
Operating temperature	-40		100	°C	non permanent
Storage temperature	-40		100	°C	non permanent
Thermistor resistance		30		kΩ	25°C
beta		3964		K	25°C/100°C
Field of view	2x	90		°	at 50% points

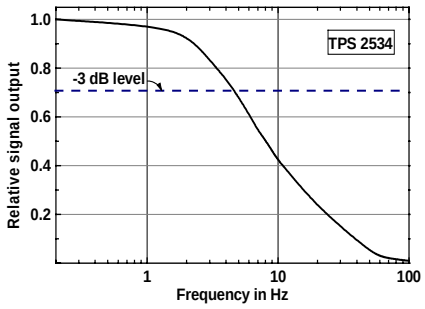

Right for modification reserved / WS /, 21.5.2001

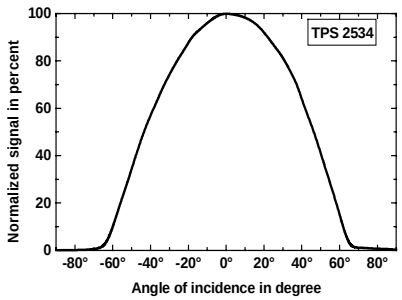

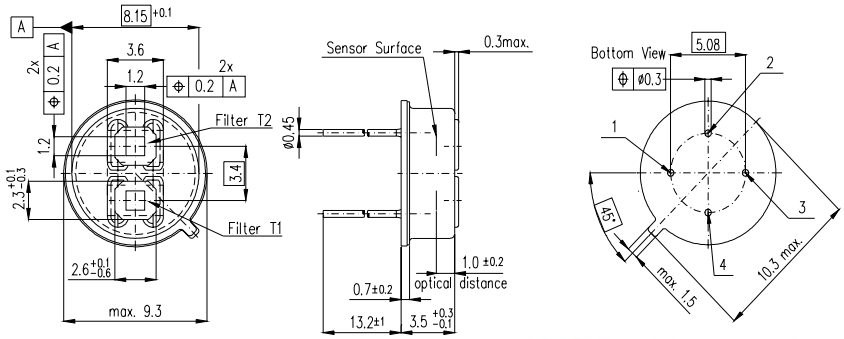

Dimensions in mm

Europe:
PerkinElmer Optoelectronics GmbH
Wenzel Jaksch Str 31
Wiesbaden / Germany
Phone +49(0)611 492 0
Fax +49(0)611 492 170

USA:
PerkinElmer Optoelectronics
2175 Mission Colledge Blvd
Santa Clara, CA 95054
Phone +408 565 0830
Fax +408 565 0703

Asia:
PerkinElmer Optoelectronics
47, Ayer Rajah Crescent #06-12
Singapore 139947
Phone +65 775 2022
Fax +65 775 1008

PerkinElmer® optoelectronics.

Downloaded from Elcodis.com electronic components distributor