5 BIT

FEATURES

- DC - 500 MHz
- 1 dB LSB, 31 dB Range
- 100 nSec Switching Speed
- 9 mA, +5 VDC
- 14 mA, -12 VDC
- 24 Pin Flatpack
- See DA0953 for 24 Pin DIP

MODEL NO. DAT58032

GaAs 5 Section Attenuator

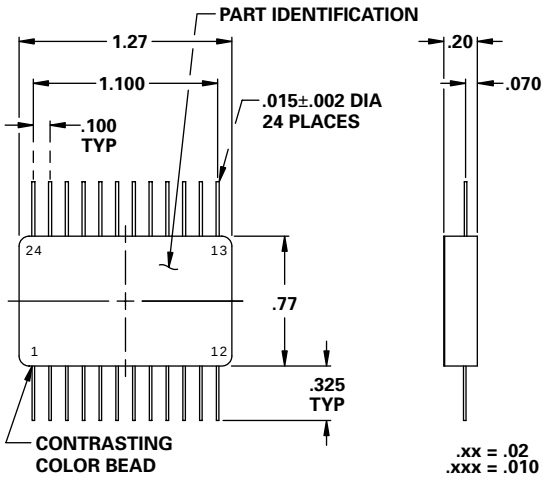

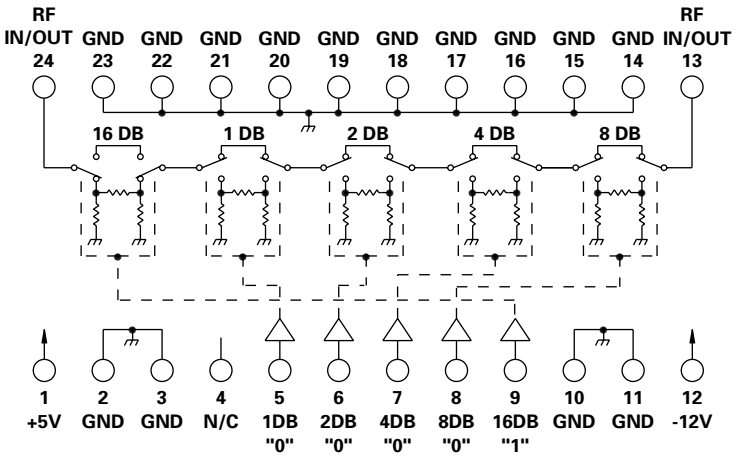

N/C = NO INTERNAL CONNECTION

TYPICAL PERFORMANCE

at 25°C

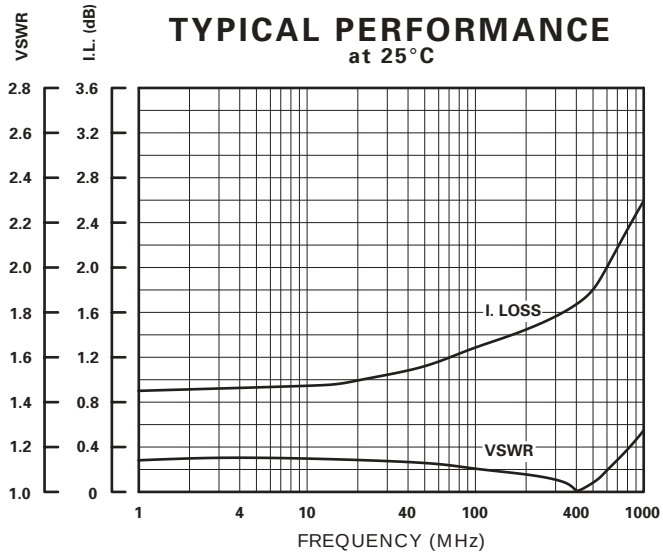

GUARANTEED PERFORMANCE

Parameter		Min	Typ	Max	Units	Conditions
Operating Frequency		DC		500	MHz	
DC Current			9	30	mA	At +5 VDC Supply
			14	25	mA	At -12 VDC Supply
Control Type			TTL			5 Line Logic "0" = Thru Logic "1" = Attenuation
Control Current	*High*		0	±40	µA	VIH = +2.0 V
	Low		0	±40	µA	VIL = +0.8 V
Insertion Loss			1.8	3.0	dB	
Attenuation	*LSB*		1		dB	
	Range			31	dB	1, 2, 4, 8, 16
	Accuracy			±1	dB	
VSWR			1.4/1	1.6/1		
Impedance			50		OHMS	
Switching Speed			100	200	nSec	50% TTL to 90% / 10% RF
Transition (Rise/Fall) Time			40	100	nSec	90% / 10% or 10% / 90% RF
Switching (Video) Transients				-50	dBm	In Band, any 5 MHz Band
Intercept Points	*3rd*	+30	+45		dBm	35 MHz / 50 MHz
RF Power	*Operate*		+18	+15	dBm	1.0 dB Compression
	No Damage			+30	dBm	
Operating Temperature		-40	+25	+90	°C	TA

Downloaded from Elcodis.com electronic components distributor