2.0mm PITCH PLUG RIGHT SMD TYPE FOR 2.5"HDD

(MOTHER BOARD SIDE)

200223MB Series

Mates With SUYIN 200220FD Series

Specifications:

- **44 Circuits**
- **Insulator material** : Black High Temp . Plastic
- **Max Processing Temp.**: 230°C for 30 Seconds
- **Terminal Material** : Pho. bronze
- **Plating** : Contact-Full Gold Plated
- **Max. Current Rating** : 1.5A
- **Voltage Rating** : 150V AC
- **Dielectric Strength** : 500V(Min. 60 seconds)

2.0 mm

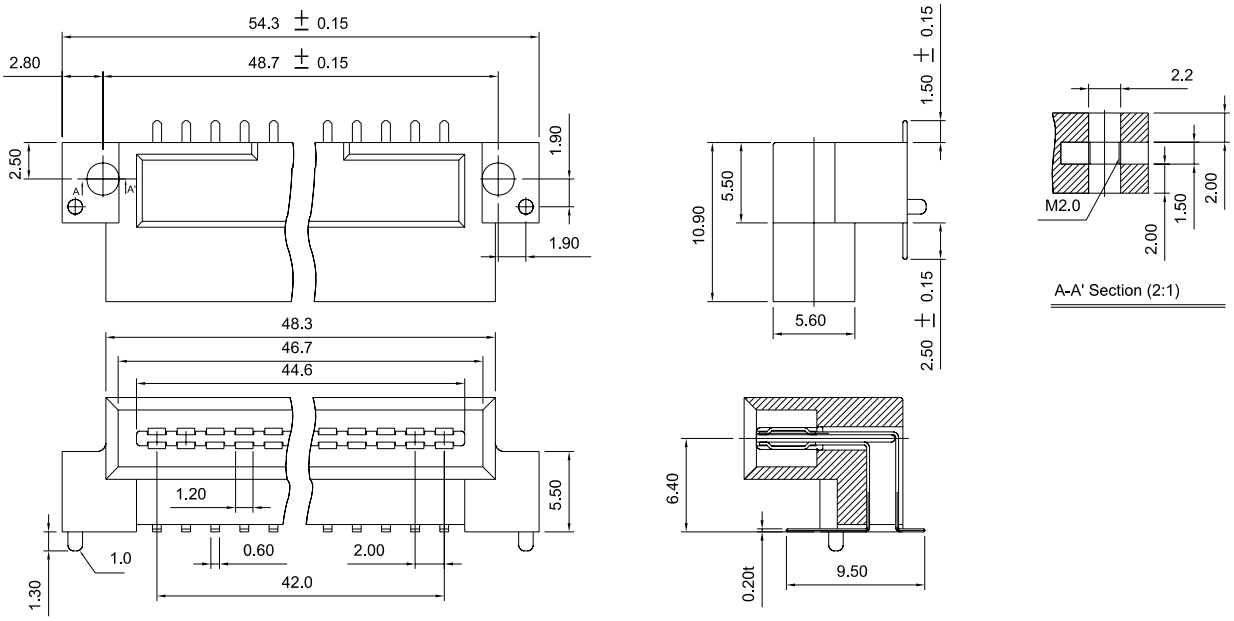

Order Information

200223MB044G500ZU
1 2 3 4 5

1. 'B' : Right Angle SMT Type
2. No. of Pins
3. Plating
   'G5' : 30u" In Contact Area
4. Color 'Z' : Black
5. Package
   'U' : Tube Package Without CAP

Reference Page 11

Recommended P.C.B Layout

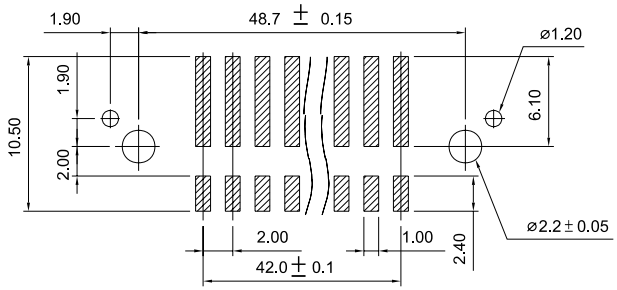

Downloaded from Elcodis.com electronic components distributor