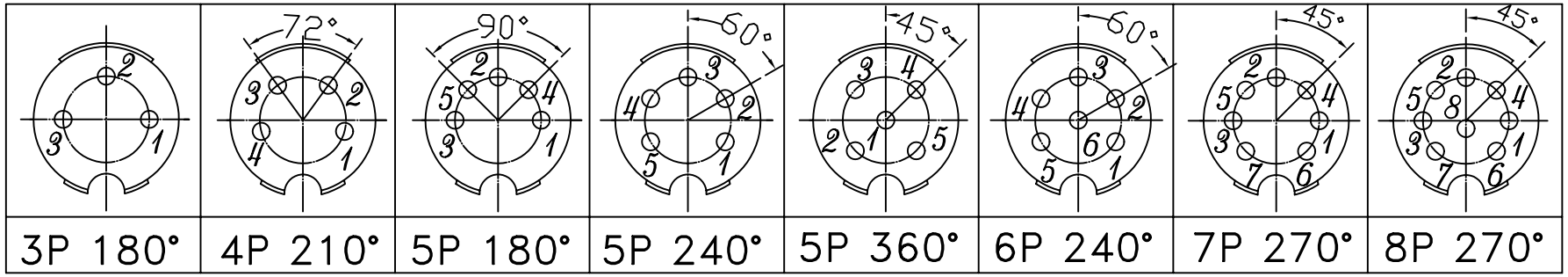

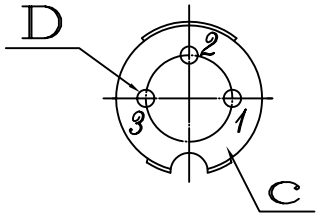

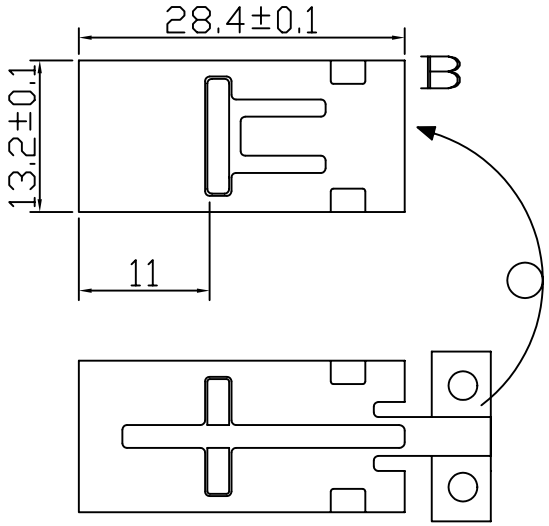

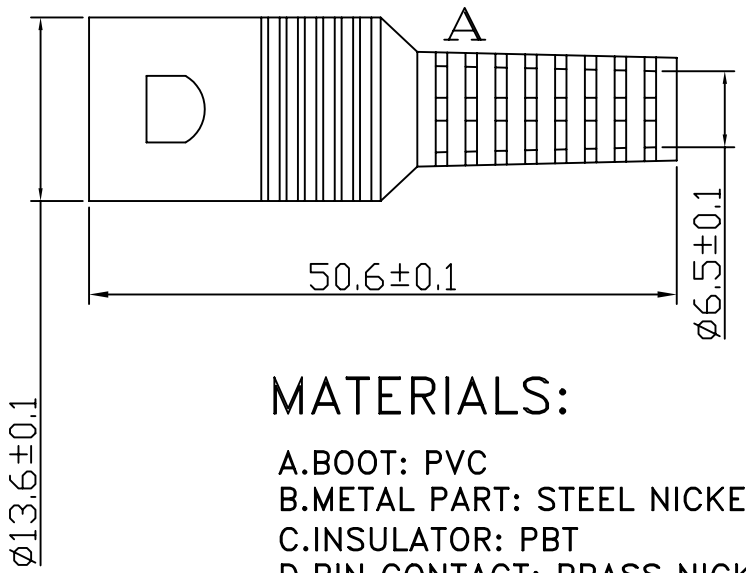

MATERIALS:

A.BOOT: PVC
B.METAL PART: STEEL NICKEL PLATED
C.INSULATOR: PBT
D.PIN CONTACT: BRASS NICKEL PLATED

SPECIFICATIONS:

1.RATING:100V AC AT 1A
2.INSULATION RESISTANCE:
OVER 100M IHM AT 500V DC
3.DIELECTRIC STRENGTH:
250V AC FOR ONE MINUTE

MORETHANALL CONNECTORS ASSEMBLIES	PART NO. DA-P-xx			TOLERANCES ARE	DESCRIP TION:	DIN PLUG ASS'Y TYPE	
	DWG NO. DA-P-xx		APPROVED BY CY	.X .XX .XXX AWG			
煜倫有限公司	FILE NO.		DRAWING BY		AREA	REVISIONS	HK	DATE
	UNIT / mm	SCALE 1:1	PROJECTION				