STP30NE06L
STP30NE06LFP

N - CHANNEL 60V - 0.035 Ω - 30A - TO-220/TO-220FP
STripFET™ POWER MOSFET

TYPE	V_{DSS}	$R_{DS(on)}$	I_D
STP30NE06L	60 V	< 0.05 Ω	30 A
STP30NE06LFP	60 V	< 0.05 Ω	17 A

- TYPICAL $R_{DS(on)}$ = 0.035 Ω
- 100% AVALANCHE TESTED
- LOW GATE CHARGE
- APPLICATION ORIENTED CHARACTERIZATION

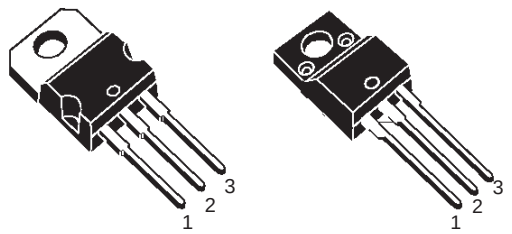

TO-220 TO-220FP

DESCRIPTION

This Power MOSFET is the latest development of STMicroelectronics unique "Single Feature Size™" strip-based process. The resulting transistor shows extremely high packing density for low on-resistance, rugged avalanche characteristics and less critical alignment steps therefore a remarkable manufacturing reproducibility.

INTERNAL SCHEMATIC DIAGRAM

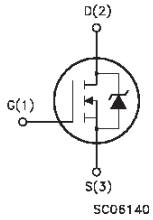

APPLICATIONS

- DC MOTOR CONTROL
- DC-DC & DC-AC CONVERTERS
- SYNCHRONOUS RECTIFICATION

ABSOLUTE MAXIMUM RATINGS

Symbol	Parameter	Value		Unit
		STP30NE06L	STP30NE06LFP	
V_{DS}	Drain-source Voltage (V_{GS} = 0)	60		V
V_{DGR}	Drain- gate Voltage (R_{GS} = 20 kΩ)	60		V
V_{GS}	Gate-source Voltage	± 20		V
I_D	Drain Current (continuous) at T_c = 25 °C	30	17	A
I_D	Drain Current (continuous) at T_c = 100 °C	21	12	A
I_{DM}(•)	Drain Current (pulsed)	120	68	A
P_{tot}	Total Dissipation at T_c = 25 °C	80	30	W
	Derating Factor	0.53	0.2	W/°C
V_{ISO}	Insulation Withstand Voltage (DC)	—	2000	V
T_{stg}	Storage Temperature	-65 to 175		°C
T_j	Max. Operating Junction Temperature	175		°C

(•) Pulse width limited by safe operating area

THERMAL DATA

		TO-220	TO-220FP	
$R_{thj-case}$	Thermal Resistance Junction-case Max	1.875	5	°C/W
$R_{thj-amb}$ $R_{thc-sink}$ T_l	Thermal Resistance Junction-ambient Max Thermal Resistance Case-sink Typ Maximum Lead Temperature For Soldering Purpose	62.5 0.5 300		°C/W °C/W °C

AVALANCHE CHARACTERISTICS

Symbol	Parameter	Max Value	Unit
I_{AR}	Avalanche Current, Repetitive or Not-Repetitive (pulse width limited by T_j max)	20	A
E_{AS}	Single Pulse Avalanche Energy (starting T_j = 25 °C, I_D = I_{AR}, V_{DD} = 50 V)	100	mJ

ELECTRICAL CHARACTERISTICS (T_{case} = 25 °C unless otherwise specified)

OFF

Symbol	Parameter	Test Conditions	Min.	Typ.	Max.	Unit
$V_{(BR)DSS}$	Drain-source Breakdown Voltage	I_D = 250 µA V_{GS} = 0	60			V
I_{DSS}	Zero Gate Voltage Drain Current (V_{GS} = 0)	V_{DS} = Max Rating V_{DS} = Max Rating T_c = 125 °C			1 10	µA µA
I_{GSS}	Gate-body Leakage Current (V_{DS} = 0)	V_{GS} = ± 20 V			± 100	nA

ON (*)

Symbol	Parameter	Test Conditions	Min.	Typ.	Max.	Unit
$V_{GS(th)}$	Gate Threshold Voltage	V_{DS} = V_{GS} I_D = 250 µA	1	1.75	2.5	V
$R_{DS(on)}$	Static Drain-source On Resistance	V_{GS} = 5 V I_D = 15 A V_{GS} = 10 V I_D = 15 A		0.045 0.035	0.06 0.05	Ω Ω
$I_{D(on)}$	On State Drain Current	V_{DS} > $I_{D(on)}$ x $R_{DS(on)max}$ V_{GS} = 10 V	30			A

DYNAMIC

Symbol	Parameter	Test Conditions	Min.	Typ.	Max.	Unit
g_{fs} (*)	Forward Transconductance	V_{DS} > $I_{D(on)}$ x $R_{DS(on)max}$ I_D =15 A	10	18		S
C_{iss} C_{oss} C_{rss}	Input Capacitance Output Capacitance Reverse Transfer Capacitance	V_{DS} = 25 V f = 1 MHz V_{GS} = 0		1350 195 58		pF pF pF

ELECTRICAL CHARACTERISTICS (continued)

SWITCHING ON

Symbol	Parameter	Test Conditions	Min.	Typ.	Max.	Unit
$t_{d(on)}$ t_r	Turn-on Delay Time Rise Time	V_{DD} = 30 V I_D = 15 A R_G = 4.7 Ω V_{GS} = 4.5 V (Resistive Load, see fig. 3)		25 105		ns ns
Q_g Q_{gs} Q_{gd}	Total Gate Charge Gate-Source Charge Gate-Drain Charge	V_{DD} = 48 V I_D = 30 A V_{GS} = 5 V		20 8 10	28	nC nC nC

SWITCHING OFF

Symbol	Parameter	Test Conditions	Min.	Typ.	Max.	Unit
$t_{d(off)}$ t_f	Turn-off Delay Time Fall Time	V_{DD} = 30 V I_D = 15 A R_G = 4.7 Ω V_{GS} = 4.5 V (Resistive Load, see fig. 3)		50 20		ns ns
$t_{r(Voff)}$ t_f t_c	Off-voltage Rise Time Fall Time Cross-over Time	V_{DD} = 48 V I_D = 30 A R_G = 4.7 Ω V_{GS} = 4.5 V (Inductive Load, see fig. 5)		15 40 60		ns ns ns

SOURCE DRAIN DIODE

Symbol	Parameter	Test Conditions	Min.	Typ.	Max.	Unit
I_{SD} I_{SDM} (•)	Source-drain Current Source-drain Current (pulsed)				30 120	A A
V_{SD} (*)	Forward On Voltage	I_{SD} = 30 A V_{GS} = 0			1.5	V
t_{rr} Q_{rr} I_{RRM}	Reverse Recovery Time Reverse Recovery Charge Reverse Recovery Current	I_{SD} = 30 A di/dt = 100 A/µs V_{DD} = 30 V T_j = 150 °C (see test circuit, fig. 5)		80 0.18 4.5		ns µC A

(*) Pulsed: Pulse duration = 300 µs, duty cycle 1.5 %
(•) Pulse width limited by safe operating area

Safe Operating Area for TO-220

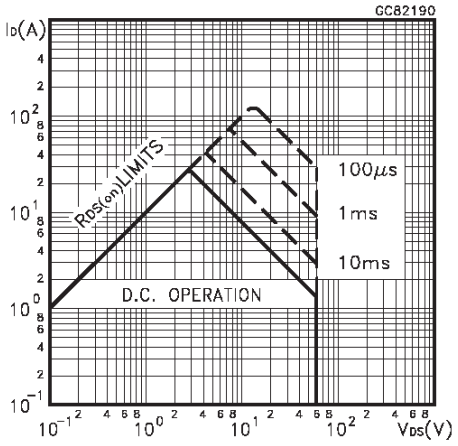

Safe Operating Area for TO-220FP

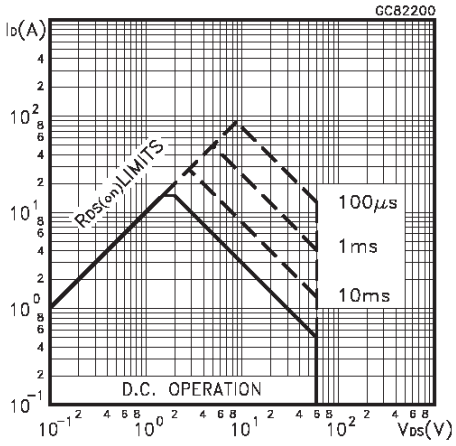

Thermal Impedance for TO-220

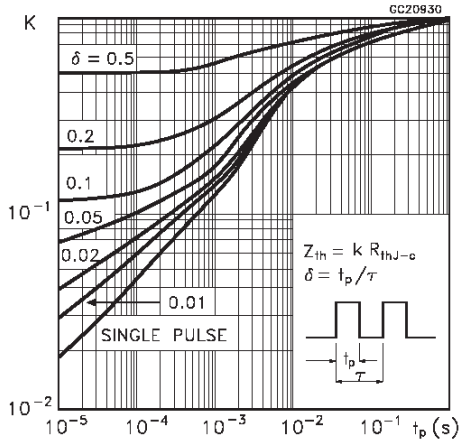

Thermal Impedance forTO-220FP

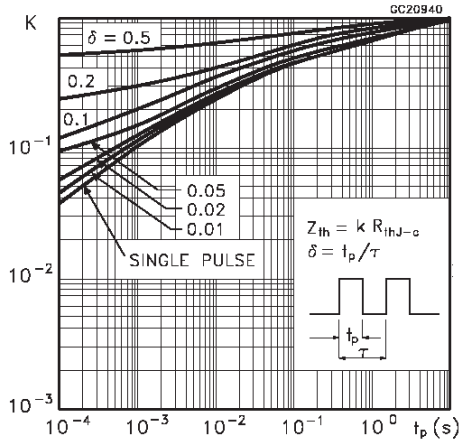

Output Characteristics

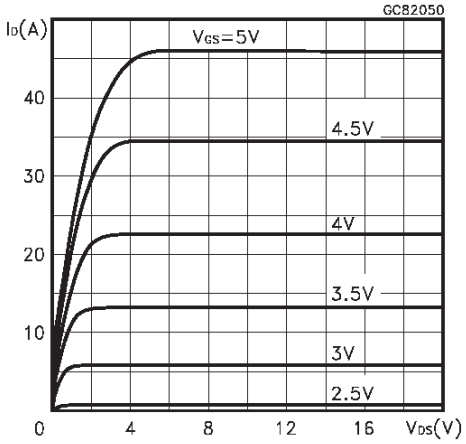

Transfer Characteristics

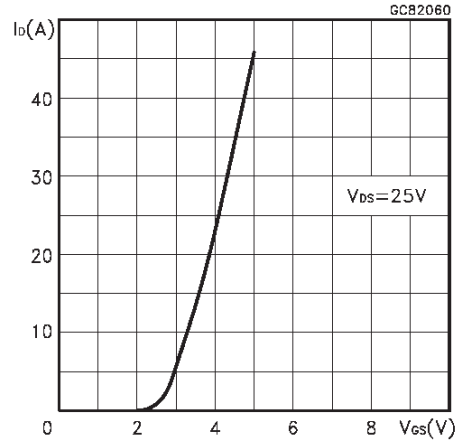

Transconductance

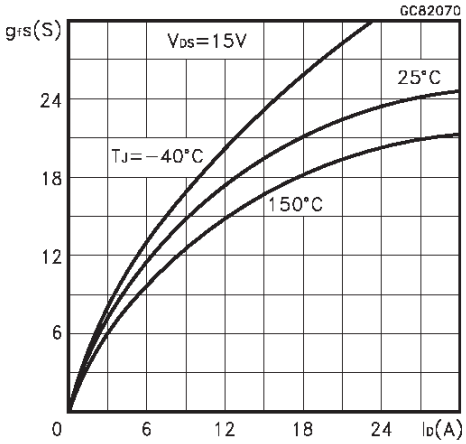

Static Drain-source On Resistance

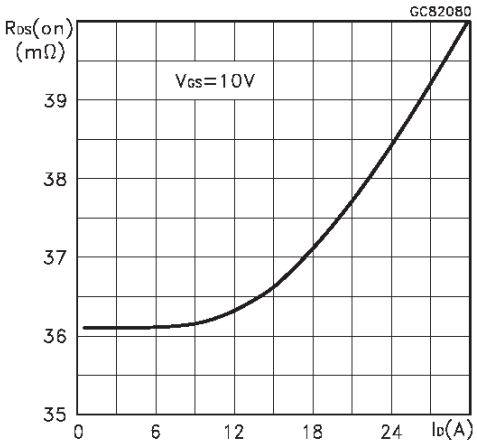

Gate Charge vs Gate-source Voltage

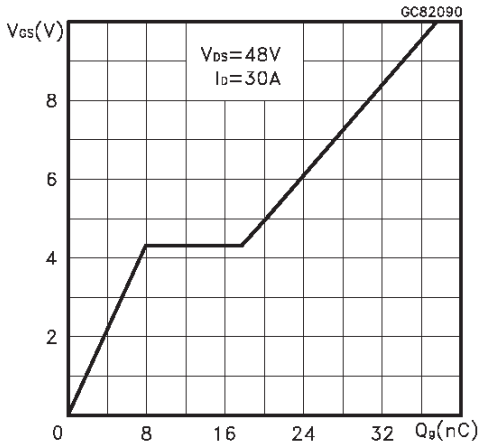

Capacitance Variations

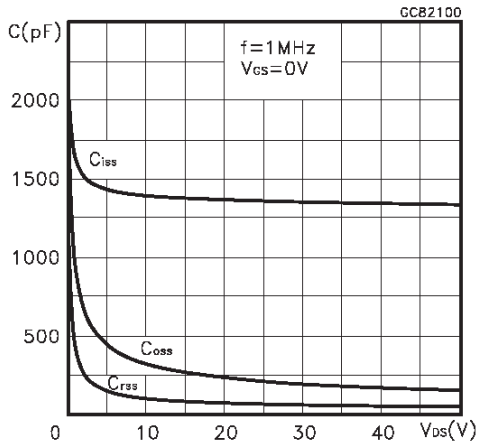

Normalized Gate Threshold Voltage vs Temperature

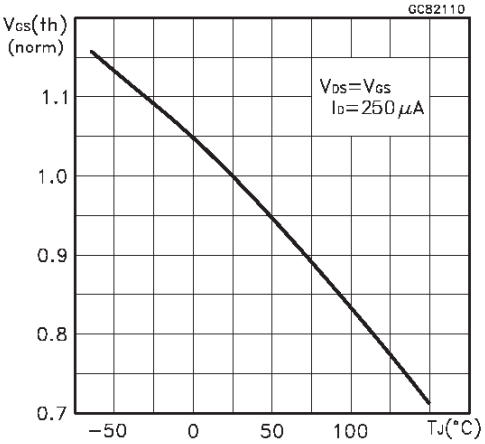

Normalized On Resistance vs Temperature

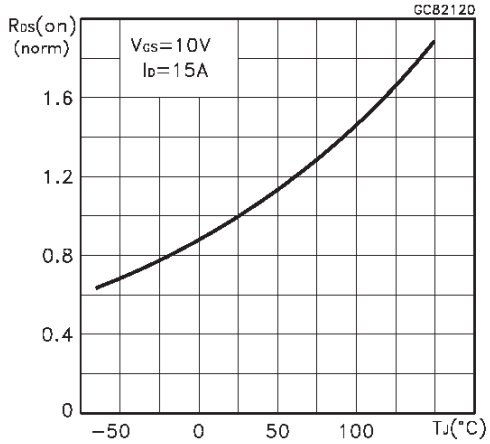

Source-drain Diode Forward Characteristics

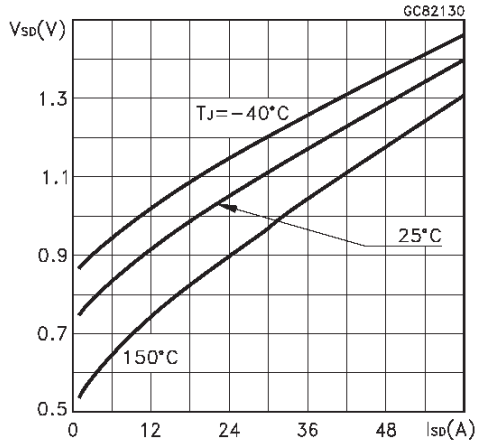

Fig. 1: Unclamped Inductive Load Test Circuit

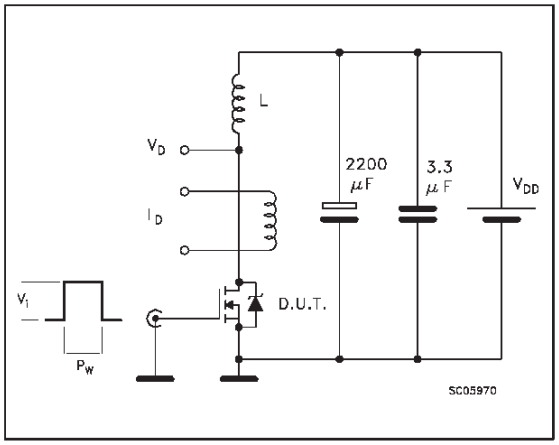

Fig. 2: Unclamped Inductive Waveform

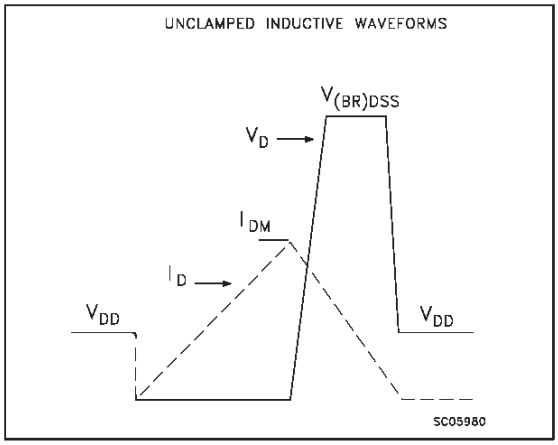

Fig. 3: Switching Times Test Circuits For Resistive Load

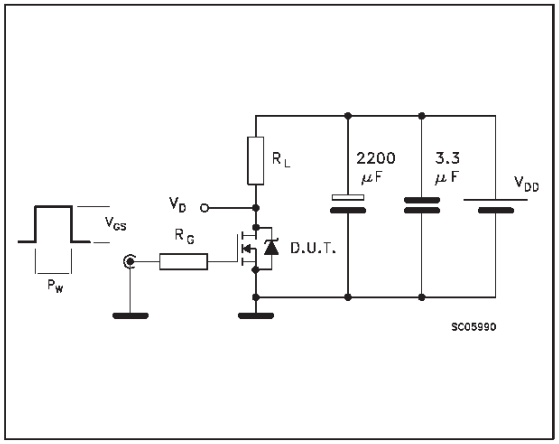

Fig. 4: Gate Charge test Circuit

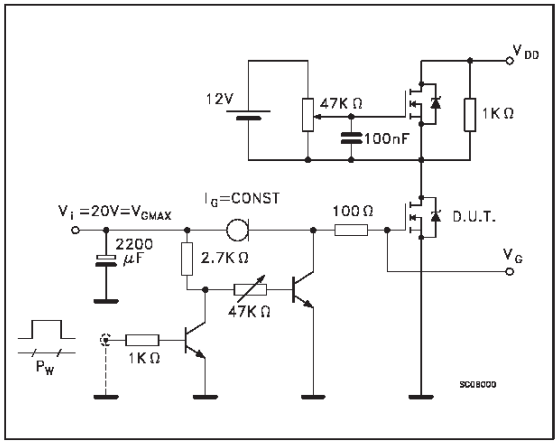

Fig. 5: Test Circuit For Inductive Load Switching And Diode Recovery Times

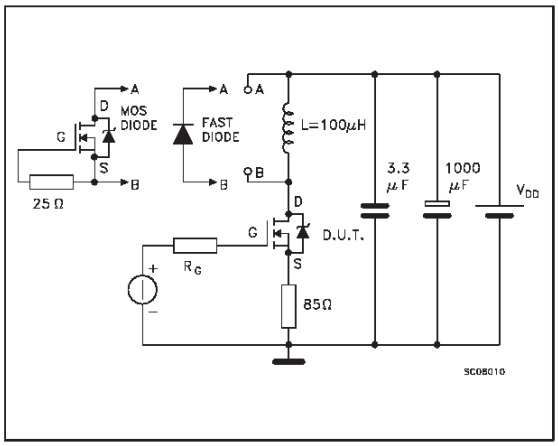

TO-220 MECHANICAL DATA

DIM.	mm			inch		
	MIN.	TYP.	MAX.	MIN.	TYP.	MAX.
A	4.40		4.60	0.173		0.181
C	1.23		1.32	0.048		0.051
D	2.40		2.72	0.094		0.107
D1		1.27			0.050	
E	0.49		0.70	0.019		0.027
F	0.61		0.88	0.024		0.034
F1	1.14		1.70	0.044		0.067
F2	1.14		1.70	0.044		0.067
G	4.95		5.15	0.194		0.203
G1	2.4		2.7	0.094		0.106
H2	10.0		10.40	0.393		0.409
L2		16.4			0.645	
L4	13.0		14.0	0.511		0.551
L5	2.65		2.95	0.104		0.116
L6	15.25		15.75	0.600		0.620
L7	6.2		6.6	0.244		0.260
L9	3.5		3.93	0.137		0.154
DIA.	3.75		3.85	0.147		0.151

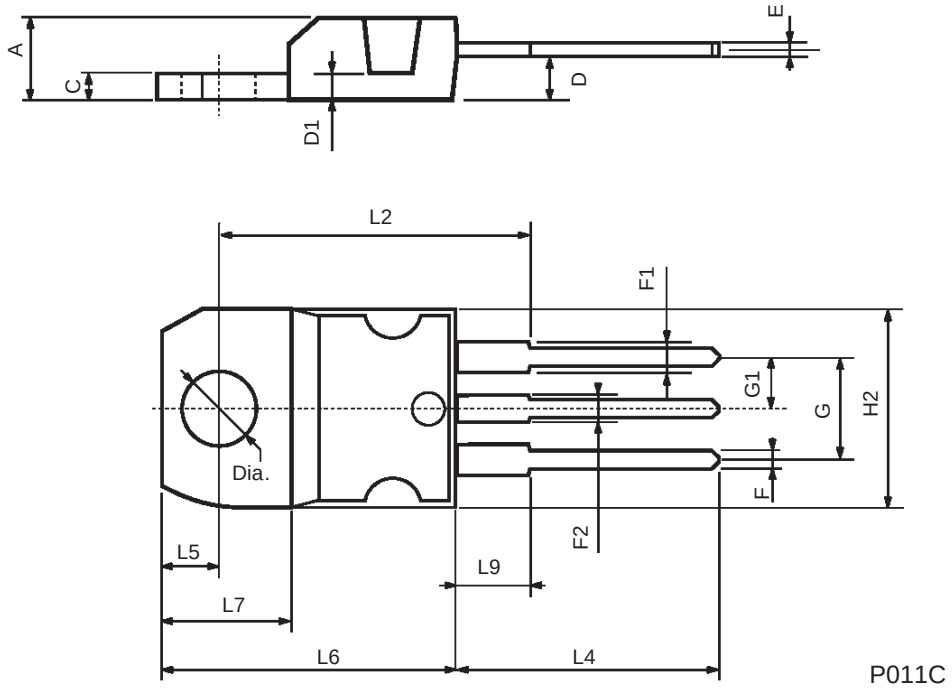

TO-220FP MECHANICAL DATA

DIM.	mm			inch		
	MIN.	TYP.	MAX.	MIN.	TYP.	MAX.
A	4.4		4.6	0.173		0.181
B	2.5		2.7	0.098		0.106
D	2.5		2.75	0.098		0.108
E	0.45		0.7	0.017		0.027
F	0.75		1	0.030		0.039
F1	1.15		1.7	0.045		0.067
F2	1.15		1.7	0.045		0.067
G	4.95		5.2	0.195		0.204
G1	2.4		2.7	0.094		0.106
H	10		10.4	0.393		0.409
L2		16			0.630	
L3	28.6		30.6	1.126		1.204
L4	9.8		10.6	0.385		0.417
L6	15.9		16.4	0.626		0.645
L7	9		9.3	0.354		0.366
Ø	3		3.2	0.118		0.126