WirelessUSB™ EX Radio

1.0 Features

The Cypress CYWUSB6941 WirelessUSB™ EX radio transceiver is designed to work with the Cypress CYWUSB6942 WirelessUSB EX baseband controller to provide a complete WirelessUSB EX solution. The CYWUSB6941 contains a 2.4-GHz radio transceiver, a GFSK modem, and a radio control interface that communicates with the CYWUSB6942.

- **Typically requires only eight external components for ease of implementation and manufacturing**
- **-6-dBm (typical) transmit power for a transmission range of up to 10 meters**
- **-82-dBm (typical) receive sensitivity**
- **Provides low-power operating modes to conserve battery life**
- **2.7V to 3.6V operation**
- **7 x 5 x 1.2 mm 42-pin FBGA package**

2.0 Applications

The CYWUSB6941 is targeted for the following Human Input Device (HID) applications:

- Mice
- Keyboards
- Joysticks/Gamepads.

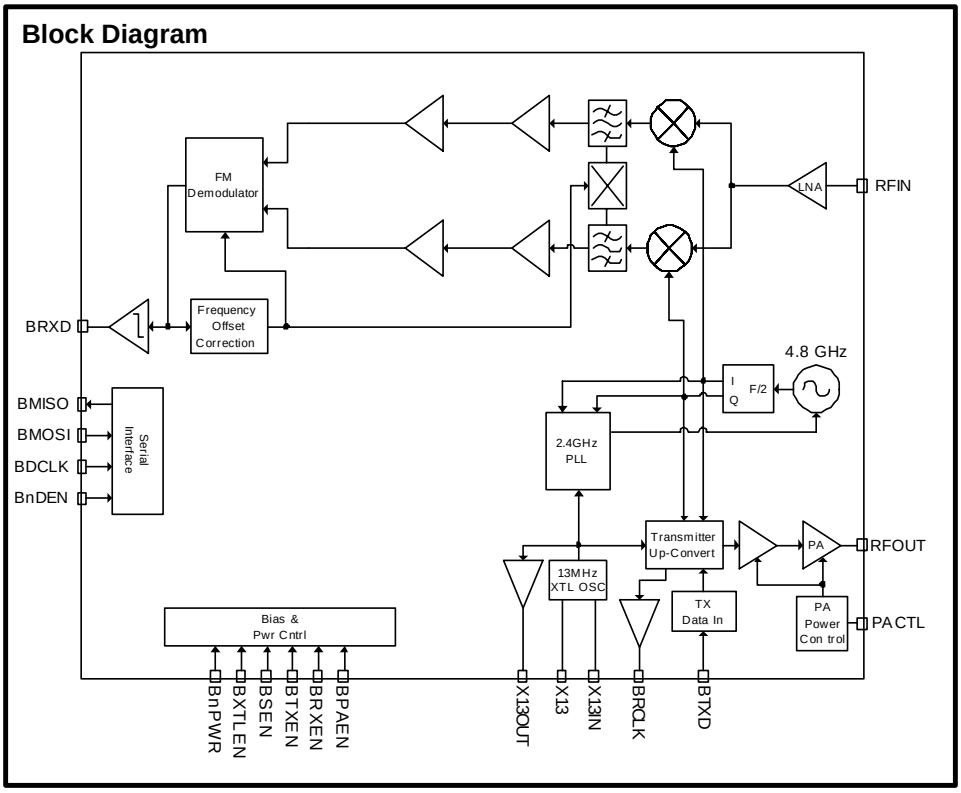

Figure 2-1. CYWUSB6941 Block Diagram

TABLE OF CONTENTS

LIST OF FIGURES

LIST OF TABLES

3.0 Functional Overview

The Cypress CYWUSB6941 WirelessUSB EX transceiver is designed to work with the Cypress CYWUSB6942 WirelessUSB EX baseband controller to provide a complete WirelessUSB EX solution. The CYWUSB6941 contains a 2.4-GHz radio transceiver, a GFSK modem, and a radio control interface that communicates with the CYWUSB6942 WirelessUSB EX baseband. The CYWUSB6941 also facilitates the development of a complete WirelessUSB EX system with a minimum number of additional components, typically requiring only eight external components (including crystal) for ease of implementation and manufacturing (refer to *Figure 3-1*). Specific features include:

- 2.4-GHz frequency-hopping spread spectrum (FHSS) transceiver
- GFSK modulator/demodulator
- No external transmit/receive switch required
  - Minimizes the need for external components
- Closed-loop phase-locked loop (PLL)
  - VCO is integrated in the CYWUSB6941
  - No external loop circuitry required
- Radio control interface.

3.1 2.4-GHz Radio Transceiver and GFSK Modem

The receiver is a low-IF architecture with fully integrated IF filters to achieve high performance in the presence of interference. The FM demodulator and fast data slicer are fully integrated.

The hop frequency synthesizer provides the frequency-hopping local oscillator for the transmitter and receiver. The only external components required are reference crystal, and several capacitors. The RF VCO is fully integrated, requiring no external tank circuits.

The transmitter uses a DSP-based vector modulator to convert the transmit data to an accurate GFSK-modulated carrier. There are a variety of DC power control features for transmitter, synthesizer, and receiver functions to optimize the average current drain.

3.2 Clocking

The CYWUSB6941 requires an external 13-MHz crystal with the following characteristics:

- Crystal temperature stability: ± 15 ppm max
- Crystal load capacitance: 10 – 15 pF.

The crystal has to be placed across the X13IN and X13 pins. No extra capacitors are needed.

3.3 Application Examples

3.3.1 Application Example with the CYWUSB6942

Figure 3-1 shows an application example with external components.[1]

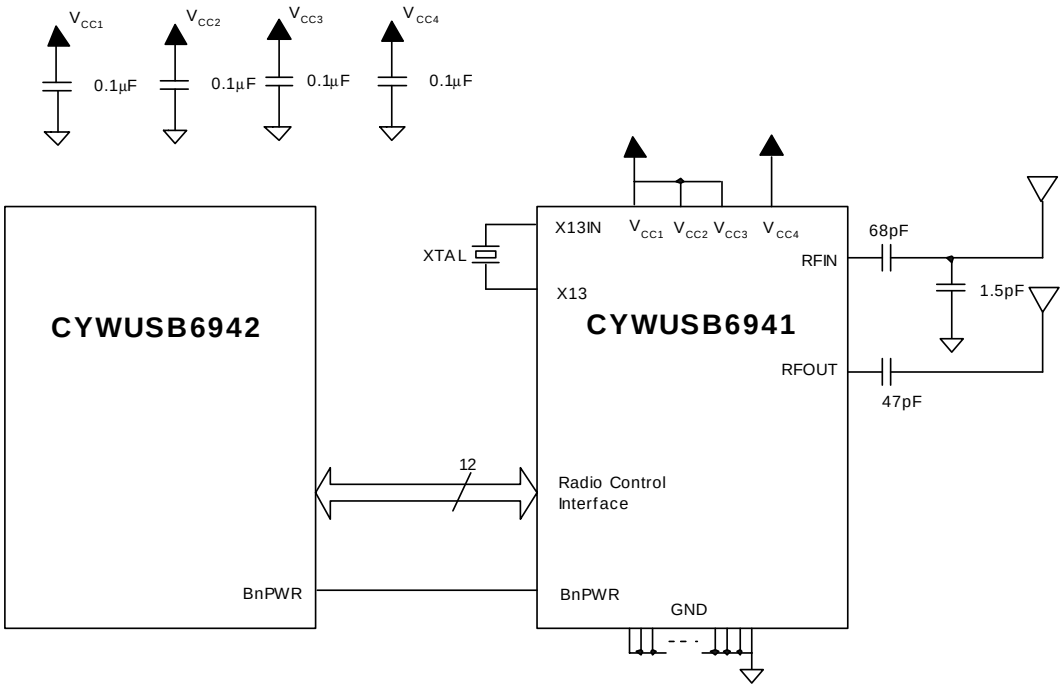

Figure 3-1. CYWUSB6941 Application Example with External Components

Note:

1. The matching network components between the RFIN, and RFOUT are chosen based on the usage of a four-layer FR4 PCB (part number PCD-9100). See application notes for additional details on board layout requirements. See application notes for RF critical design considerations.

4.0 Pin Description

Table 4-1. Pin Description Table for the CYWUSB6941

Ball	Name	Type	Default	Description
RF Pins				
E1	RFIN	Input	N/A	**Antenna Input**. Modulated RF signal received.
F5	RFOUT	Output	N/A	**Antenna Output**. Modulated RF signal to be transmitted.
Filter/Crystal/Power Control Pins				
D7	X13	Input	N/A	**Crystal Differential Input**. Input for a differential crystal oscillator.
E7	X13IN	Input	N/A	**Crystal Differential Input**. Input for a differential crystal oscillator.
B7	X13OUT	Output		**System Clock**. Buffered 13-MHz system clock.
Radio Control Interface (Data Pins)				
A5	BTXD	Input		**Transmit Data**. Transmit data input port.
A6	BRXD	Output		**Receive Data**. Demodulated and sliced digital receive data.
D5	PACTL	Output		**Power Amplifier Control.** High is an enable for external power amplifier in the transmit mode.
Radio Control Interface (Control Pins)				
B5	BRCLK	Output		**Transmit Clock**. 1-MHz clock associated with the transmit data.
C5	BPAEN	Input		**Power Amplifier Enable**. Enables the PA in transmit mode. Active HIGH.
C6	BRXEN	Input		**Receive Circuitry Enable**. This signal enables the receive circuitry. Active HIGH.
B6	BTXEN	Input		**Transmit Circuitry Enable**. This signal enables the transmit circuitry. Active HIGH.
C4	BSEN	Input		**Synthesizer Enable**. This signal enables the hop synthesizer. Active HIGH.
A2	BnPWR	Input		**Power-on Reset**. This signal is active LOW. Connects to CYWUSB6942 signal BnPWR
D6	BXTLEN	Input		**Crystal Oscillator Enable**. This signal enables the crystal oscillator. Active HIGH.
Serial Interface Pins				
A3	BMOSI	Input		**Input Data**. This is the serial data input pin.
B3	BMISO	Output		**Output Data**. This is the serial data output pin.
A4	BDCLK	Input		**Input Clock**. This is the serial input clock.
B4	BnDEN	Input		**Enable**. This signal enables the serial communication.
Power and Ground Pins				
B2	VCC1	V_{CC}	H	**V_{CC} pins for RF and analog baseband signals**.
D1	VCC2			
F6	VCC3			
E6	VCC4	V_{CC}	H	**V_{CC} pin for digital signals**.
A1	GND	GND	L	**Ground pins**.
A7				
C2				
C3				
C7				
D2				
D3				
D4				
E2				
E3				
E4				
E5				
F1				

Table 4-1. Pin Description Table for the CYWUSB6941 (continued)

Ball	Name	Type	Default	Description
F2	GND	GND	L	**Ground pins**.
F3				
F4				
F7	Reserved	GND	N/A	**Reserved pin.** Must be tied to GND.
B1	Reserved	GND	N/A	**Reserved pin.** Must be tied to GND.
C1	Reserved	GND	N/A	**Reserved pin.** Must be tied to GND.

	1	2	3	4	5	6	7	
A	**GND**	**BnPWR**	**BMOSI**	**BDCLK**	**BTXD**	**BRXD**	**GND**	A
B	**Reserved**	**VCC1**	**BMISO**	**BnDEN**	**BRCLK**	**BTXEN**	**X13OUT**	B
C	**Reserved**	**GND**	**GND**	**BSEN**	**BPAEN**	**BRXEN**	**GND**	C
D	**VCC2**	**GND**	**GND**	**GND**	**PACTL**	**BXTLEN**	**X13**	D
E	**RFIN**	**GND**	**GND**	**GND**	**GND**	**VCC4**	**X13IN**	E
F	**GND**	**GND**	**GND**	**GND**	**RFOUT**	**VCC3**	**Reserved**	F
	1	2	3	4	5	6	7	

Figure 4-1. CYWUSB6941 42-Ball FBGA Top View

5.0 Radio Control Interface

The CYWUSB6941 radio control interface is the communication interface between the CYWUSB6941 transceiver and the CYWUSB6942 WirelessUSB EX baseband. It consists of a data interface and a control interface for transmitting and receiving data, and a serial interface for a control interface from the WirelessUSB baseband CYWUSB6941.

There are two subsections of the interface:

- RF data and control path
- Radio control interface (serial).

Nine signals are used in the RF data and control path, four in the serial radio control interface, and one system clock. All of the signals are unidirectional. Direction is oriented to/from the CYWUSB6941 RF IC.

5.1 Radio / Baseband Interface Connections

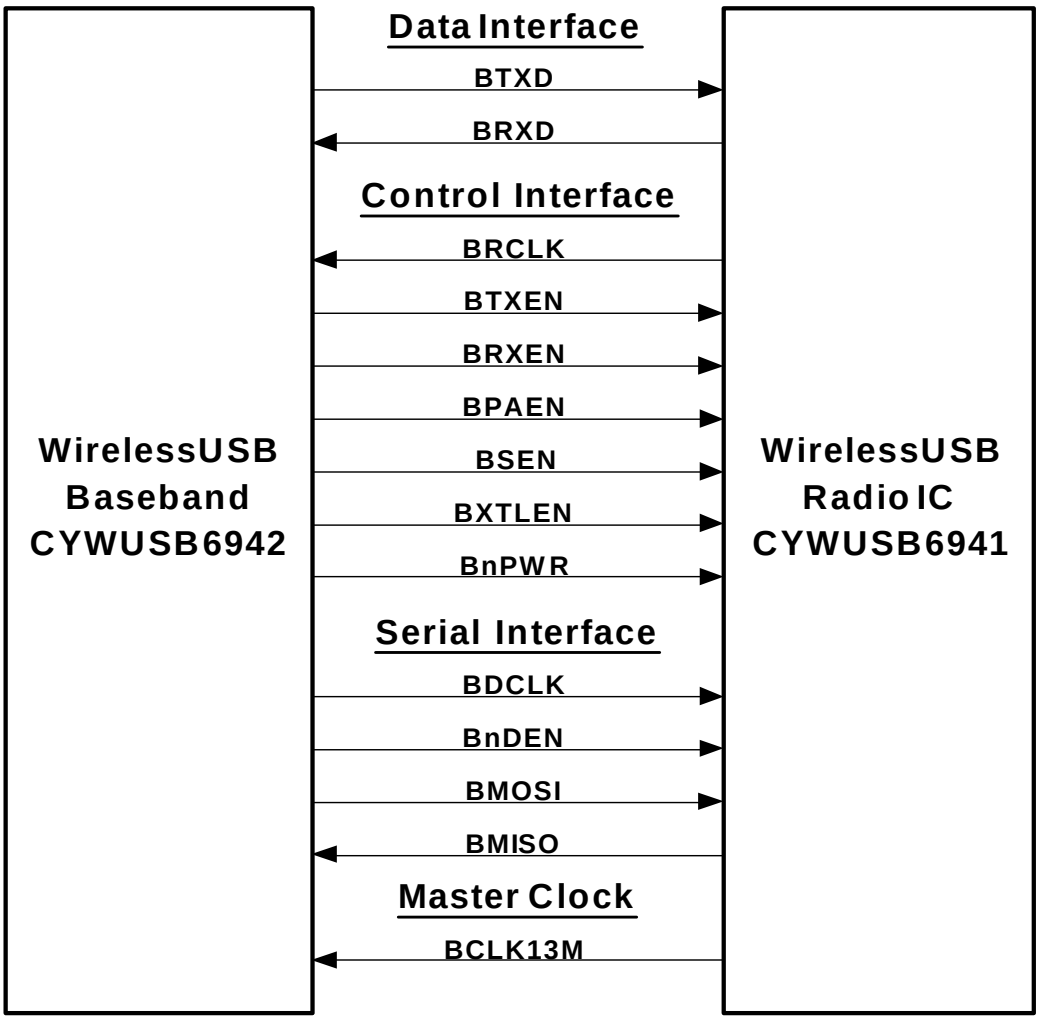

Figure 5-1. CYWUSB6941 Radio/Baseband Interface Diagram

6.0 Absolute Maximum Ratings

Storage Temperature ..... –65°C to +150°C
Ambient Temperature with Power Applied ..... 0°C to +70°C
Supply Voltage on V_{CC} relative to V_{SS} ..... –0.3V to +3.9V
DC Input Voltage ..... –0.3V to V_{CC} +0.3V
DC Voltage applied to Outputs in High-Z State ..... –0.3V to V_{CC} +0.3V
Static Discharge Voltage (Digital)[2] ..... > 2000 V
Static Discharge Voltage (RF)[2] ..... > 500 V
Latch-up Current ..... +200 mA, –200 mA

7.0 Operating Conditions

V_{CC} (Supply Voltage) ..... 2.7V to 3.6V
T_A (Ambient Temperature Under Bias) ..... 0°C to +70°C
Ground Voltage 0V
F_{OSC} (Oscillator or Crystal Frequency) ..... 13 MHz ± 20 ppm

8.0 DC Characteristics (Over the Operating Range)

Table 8-1. DC Parameters

Parameter	Description	Conditions	Min.	Typ.	Max.	Unit
V_{OH}	Output High Voltage	At I_{OH} = –2.0 mA	2.4			V
V_{OL}	Output Low Voltage	At I_{OL} = 2.0 mA			0.4	V
V_{IH}	Input High Voltage		2.0		V_{CC}	V
V_{IL}	Input Low Voltage		–0.3		0.8	V
I_{IL}	Input Leakage Current	$0 < V_{IN} < V_{CC}$	–1		+1	µA
C_{IN}	Pin Input Capacitance (except X13, X13IN, and RFIN)				8	pF
I_{Sleep}	Current consumption during sleep mode	BXTLEN = 0		1	10	µA
I_{CC} (BXTLEN)	Current consumption when crystal oscillator is enabled and stable	BnPWR = 1 BXTLEN =1		4	6	mA
I_{CC} (BSEN)	Current consumption when hop frequency synthesizer is enabled and stable	BXTLEN = 1 BSEN =1		30	40	mA
I_{CC} (BRXEN)	Current consumption when receiver circuitry is enabled and stable	BXTLEN = 1 BSEN = 1 BRXEN=1		62	85	mA
I_{CC} (BTXEN)	Current consumption when transmit circuitry is enabled and stable	BXTLEN = 1 BSEN = 1 BTXEN =1		45	70	mA
I_{CC} (BPAEN)	Current consumption when transmit circuitry and PA are enabled and stable	BXTLEN = 1 BSEN = 1 BTXEN = 1 BPAEN = 1		70	85	mA

Note:
2. Rating measured using the Human Body Model (HBM).

9.0 Radio Specification

Table 9-1. Radio Parameters

Parameter	Description	Conditions	Min.	Typ.	Max.	Unit
	RF Frequency Range		2.402		2.480	GHz
Radio Receiver (T = 25°C , V_{CC} = 3.3V)[3]						
	Sensitivity	BER ≤ 10^{-3}		-82	–74	dBm
	Maximum Received Signal	BER ≤ 10^{-3}	–38	–33		dBm
	Interference Performance	BER ≤ 10^{-3}				
	Co-channel Interference rejection Carrier-to-Interference (C/I)	C = –60 dBm		11		dB
	Adjacent (1 MHz) channel selectivity C/I 1 MHz	C = –60 dBm		3		dB
	Adjacent (2 MHz) channel selectivity C/I 2 MHz	C = –60 dBm		–25		dB
	Adjacent (≥ 3 MHz) channel selectivity C/I ≥ 3 MHz	C = –67 dBm		–35		dB
	Image Frequency Interference, C/I Image (+4 MHz)	C = –67 dBm		–20		dB
	Adjacent (1 MHz) interference to in-band image frequency, C/I image ±1 MHz (+3 MHz and +5 MHz)	C = –67 dBm		–30		dB
	Out-of-Band Blocking Interference Signal Frequency	BER ≤ 10^{-3}				
	30 MHz – 2399 MHz[4]	C = –67 dBm		–30		dBm
	2498 MHz – 12.75 GHz	C = –67 dBm		–20		dBm
	Intermodulation	C = –64 dBm Δf = 5,10 MHz		–39		dBm
	Spurious Emission					
	30 MHz – 1 GHz				–57	dBm
	1 GHz – 12.75 GHz				–47	dBm
Radio Transmitter (T = 25°C, V_{CC} = 3.3V, PA5)						
	Maximum RF Transmit Power	Pwr setting = PA5	–11	-6		dBm
	RF Power Control Range	PA0-PA5		23		dB
	RF Power Range Control Step Size	6 steps, monotonic.		4.6		dB
	Frequency Deviation			90-175		kHz
	Zero Crossing Error			±125		ns
	Occupied Bandwidth	10-kHz resolution bandwidth, –20 dBc			±500	kHz
	Initial Frequency Offset			±100		kHz
	In-band Spurious					
	Second Channel Power (±2 MHz)				–20	dBm
	≥ Third Channel Power (≥3 MHz)				–40	dBm
	Non-harmonically Related Spurious					
	30 MHz – 12.75 GHz				–57	dBm
	Harmonic Spurious					
	2nd Harmonic through 5th Harmonic				–30	dBm

Notes:
3. BER PRBS9 sequence
4. Subharmonics of receive frequency excluded.

10.0 AC Characteristics (over the operating range)

Table 10-1. AC Timing Parameters

Name	Description	Min.	Typ.	Max.	Unit
$t_{R/F}$	Rise and Fall Times on output pins (see AC test loads section 11.0)		3	20	ns
t_{BPWR}	Pulse width for BnPWR for initiating a reset	100			ns
t_{BRCLK}	BRCLK period (duty cycle = 40/60)		1		µs
t_{BTXDSU}	Set-up time, data stable (on BTXD) before positive edge on BRCLK	250			ns
$t_{BTXDHLD}$	Hold time, data stable (on BTXD) after positive edge on BRCLK	0			ns
t_{BRXDPD}	Propagation delay of data from RFIN to serial data at BRXD		3		µs
t_{BXTLEN}	Time from BXTLEN being driven HIGH to crystal oscillator becoming stable			10	ms
t_{BSEN}	Time from BSEN asserted to hop frequency synthesizer stable			250	µs
t_{BRXEN}	Time from BRXEN asserted to receiver circuitry stable for data reception	35			µs
t_{BPAOFF}	Time from last bit transmitted from the baseband to PA off	4			µs
t_{BTXEN}	Time from BTXEN to BPAEN	4			µs
Serial Interface Timing Parameters					
t_{BDCLK}	BDCLK period	154			ns
η	Duty cycle of BDCLK	40		60	%
t_{HLD}	Hold time, data stable after positive edge on BDCLK	20			ns
t_{SU}	Set-up time, data stable before positive edge on BDCLK	20			ns

10.1 Transmit and Receive Timing Diagram

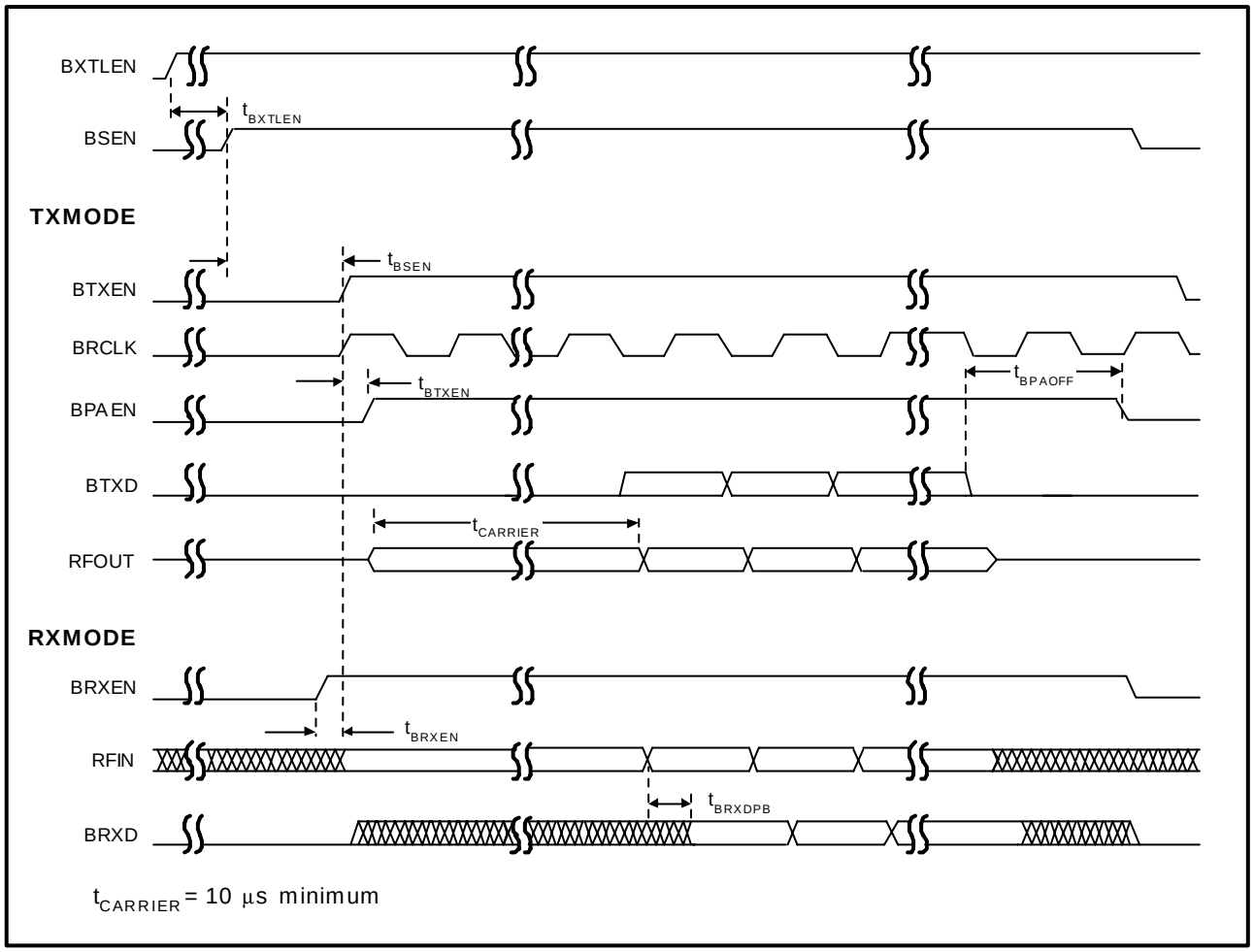

Figure 10-1. Transmit and Receive Timing Diagram

11.0 AC/DC Test Loads and Waveforms for Digital Pins

AC Test Loads

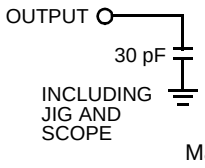

Max

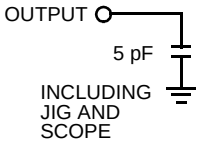

Typical

DC Test Load

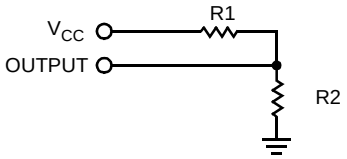

Equivalent to: THÉVENIN EQUIVALENT

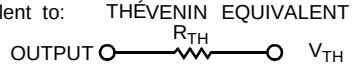

Parameter		Unit
R1	1071	Ω
R2	937	Ω
R_{TH}	500	Ω
V_{TH}	1.4	V
V_{CC}	3.00	V

ALL INPUT PULSES

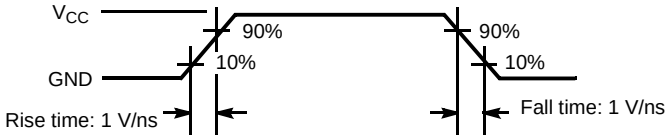

12.0 Ordering Information[5]

Table 12-1. Ordering Information

Part Number	Package Name	Package Type	Operating Range
CYWUSB6941-42BAC	42FBGA	42-ball Fine Ball Grid Array (7 x 5 x 1.2 mm)	Commercial

Note:
5. Companion part CYWUSB6942 is required for proper operation.

13.0 Package Description

The CYWUSB6941 comes in a 42-ball FBGA package with package size of 7 x 5 x 1.2 mm and a ball pitch of 0.75 mm. All dimensions are in millimeters (mm).

42-ball FBGA (7.0 x 5.0 x 1.2 mm) BA42

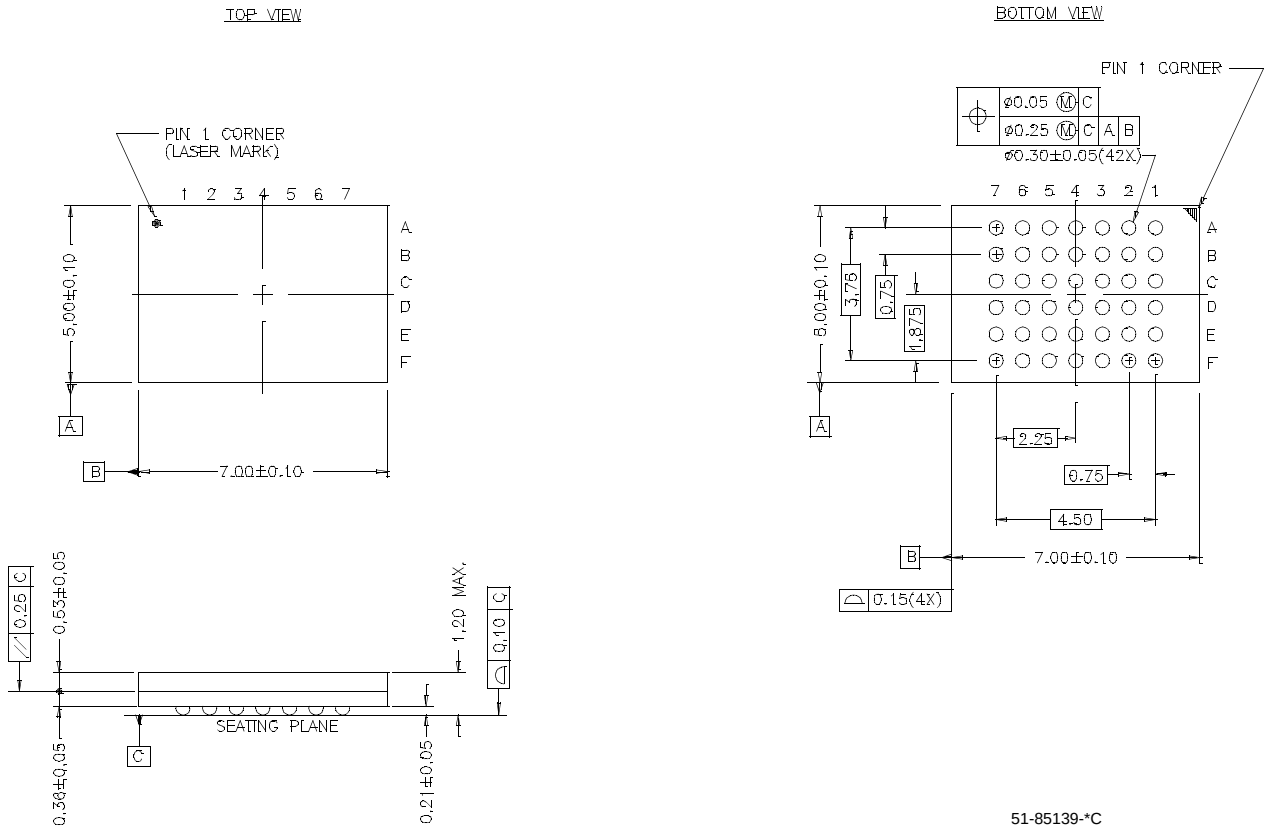

Figure 13-1. CYWUSB6941 Package Diagram

WirelessUSB™ EX is a trademark of Cypress Semiconductor. All product and company names mentioned in this document are the trademarks of their respective holders.

Document History Page

Document Title:CYWUSB6941 WirelessUSB™ EX Radio Document Number: 38-16004				
REV.	**ECN NO.**	**Issue Date**	**Orig. of Change**	**Description of Change**
**	122944	02/26/03	LXA	New Data Sheet
*A	125914	06/16/03	KKU	Updates to tables, timing and signals.