Pressure sensors

Pressure transmitters with casing (current output)

Series/Type:	**CAU-T series**
Ordering code:	
Date:	2009-04-06
Version:	1

Description

- The transmitters are based on piezoresistive silicon pressure sensors from our own clean room.
- The T-series electronic compensates non-linearity and temperature errors and supplies a precise calibrated output signal with a high immunity against electromagnetic influences (EMI).

Features

- Piezoresistive MEMs technology
- Measured media (absolute pressure):
  Air, non-aggressive gases (gas humidity 0 ... 85% r.h., without dew)
  Unsuitable for substances which react with glass, silicon, gold, aluminum, stainless steel, NBR, silicone glue or silicone gel.
- Measured media (relative pressure):
  Air, non-aggressive gases (gas humidity 0 ... 100% r.h.) and non-aggressive fluids.
  Unsuitable for substances which react with glass, silicon, stainless steel, NBR, silicone glue ($p_r \leq 10$ bar) or epoxy glue ($p_r > 10$ bar).
- 2-wire current output proportional to pressure: 4 ... 20 mA
- Reverse supply voltage protection
- RoHS-compatible, halogen-free
- Compact stainless steel casing (protection IP65) with G1/8" thread

Dimensional drawings

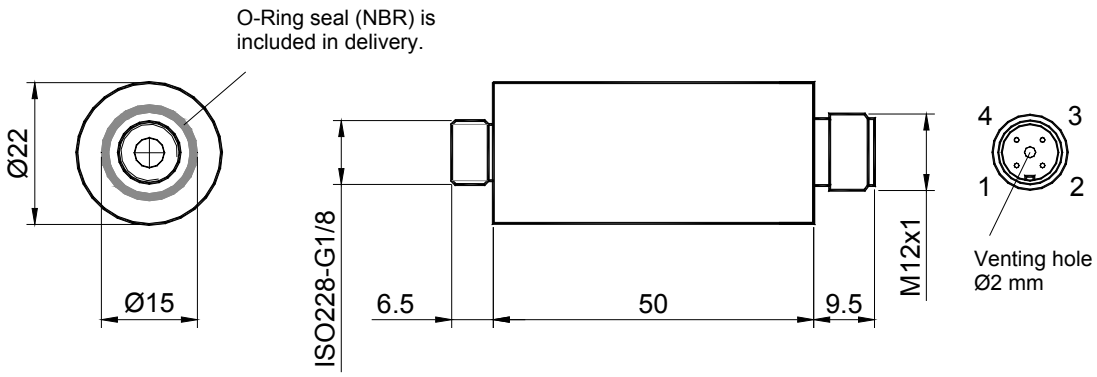

All dimensions in mm

A shielded 4-pole cable (2 m) with a modified (pressure equalization) female M12 locking plug is included in delivery.

Electrical connection	Symbol	Pin (color)
Positive supply voltage	I+ (V_{cc})	1 (brown)
Negative supply voltage	I–	3 (blue)

Technical data

Absolute maximum ratings

Parameter	Symbol	Conditions	Min.	Typ.	Max.	Unit
Temperature ranges						
Storage temperature range	T_{st}	1)	–30		+85	°C
Operating temperature range	T_a	2)	–25		+85	°C
Compensated temperature range	T_c	3)	0		+70	°C
Soldering temperature (cable)	T_{solder}	<5 s (no reflow soldering)			+240	°C
Pressure ranges						
Overpressure	p_{ov}	4), 5)	1.5			p_r
Supply voltage /-current						
Supply voltage	V_{CC}	See connection diagram 6)	10		30	V
Current limit (p >> p_r)	I_{CCMAX}		23			mA
Output signal at sensor failure	I_{ERR}				3	mA
Working resistance	R_L	See connection diagram 7)			1000	Ohm
DC break down voltage	V_{is}	8)	500			V

Parameter	Symbol	Conditions	Min.	Typ.	Max.	Unit
Output signal @ T_a = 25 °C, V_S = 15 V, R_L = 100 Ω						
Offset	I_{CC0}	Simple output AUA, AUR 9)	3.92	4.0	4.08	mA
		Symmetrical output AUS 9)	11.92	12.0	12.08	mA
Signal span (Full Scale)	I_{FS}	9)	15.92	16.0	16.08	mA
Non-linearity	L	Simple output 10), 11)		±0.1	±0.25	% FS
		Symmetrical output 10), 11)		±0.25	±0.5	% FS
Response time	t_{10-90}	12)		1		ms
Supply voltage rejection	SVR	10), 13)			±0.01	% FS/V

Parameter	Symbol	Conditions	Min.	Typ.	Max.	Unit
Data in temperature range @ T_a = –25 ... 85 °C, V_S = 15 V, R_L = 100 Ω						
Temperature hysteresis		14)		±0.1	±0.5	% FS
Data in temperature range @ T_a = 0 ... 70 °C, V_S = 15 V, R_L = 100 Ω						
Temperature coefficient of offset	TCI_{CC0}	p_r < 0.25 bar 15)		±0.015	±0.05	% FS/K
		p_r ≥ 0.25 bar 15)		±0.015	±0.03	% FS/K
Temperature coefficient of span	TCI_{FS}	16)		±0.015	±0.03	% FS/K

Characteristics

Simple output (AUA, AUR)

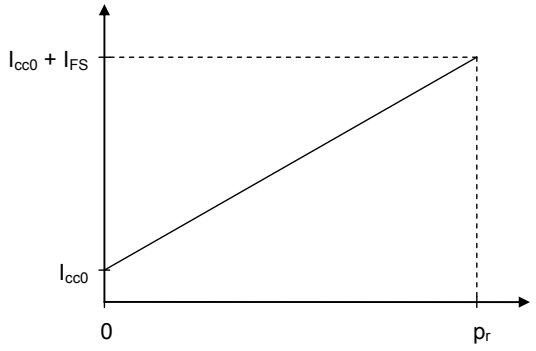

Symmetrical output (AUS)

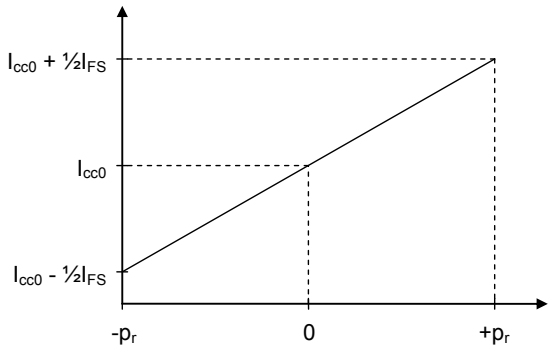

Connection diagram and conditions

$R_L \leq (V_S – 10\ V) / 0.02\ A$

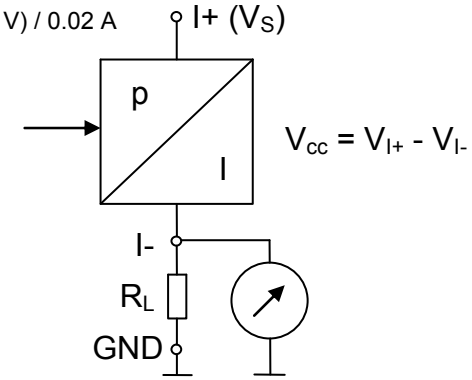

R_L range depending on V_S for proper operation

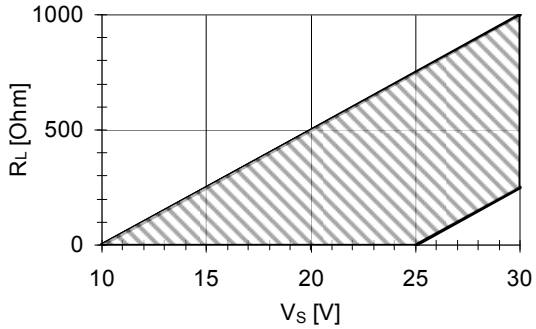

Rated pressures and ordering codes

Pressure measurement	Absolute					Relative								Relative, symmetrical			
Rated pressure p_r bar	1.000	2.500	6.000	10.00	25.00	0.100	0.250	0.400	1.000	2.500	6.000	10.00	25.00	0.100	0.250	0.400	1.000
Product type	AUA 1.000 F C4 TN H S2.0	AUA 2.500 F C4 TN H S2.0	AUA 6.000 F C4 TN H S2.0	AUA 10.00 F C4 TN H S2.0	AUA 25.00 F C4 TN H S2.0	AUR 0.100 F C4 TN H S2.0	AUR 0.250 F C4 TN H S2.0	AUR 0.400 F C4 TN H S2.0	AUR 1.000 F C4 TN H S2.0	AUR 2.500 F C4 TN H S2.0	AUR 6.000 F C4 TN H S2.0	AUR 10.00 F C4 TN H S2.0	AUR 25.00 F C4 TN H S2.0	AUS 0.100 F C4 TN H S2.0	AUS 0.250 F C4 TN H S2.0	AUS 0.400 F C4 TN H S2.0	AUS 1.000 F C4 TN H S2.0
Ordering code	B58620H5820A035	B58620H5820A036	B58620H5820A037	B58620H5820A038	B58620H5820A039	B58621H5820A040	B58621H5820A041	B58621H5820A042	B58621H5820A043	B58621H5820A044	B58621H5820A045	B58621H5820A046	B58621H5820A047	B58623H5820A048	B58623H5820A049	B58623H5820A050	B58623H5820A051

Symbols and terms

1) **Storage temperature range T_{st}**
A storage of the pressure sensor within the temperature range $T_{st,min}$ up to $T_{st,max}$ and without applied pressure and supply voltage will not affect the performance of the pressure sensor.

2) **Operating temperature range T_a**
An operation of the pressure sensor within the temperature range $T_{a,min}$ up to $T_{a,max}$ will not affect the performance of the pressure sensor.

3) **Compensated temperature range T_c**
While operating the pressure sensor within the temperature range $T_{c,min}$ up to $T_{c,max}$, the deviation of the output signal from the values at 25 °C will not exceed the temperature coefficients.
Out of the compensated temperature range, the deviations may increase.

4) **Rated pressure p_r**
Within the rated pressure range 0 up to p_r (symmetrical output: $-p_r$ up to $+p_r$) the signal output characteristic corresponds to this specification.

5) **Overpressure p_{OV}**
Pressure cycles within the pressure range 0 up to p_{ov} will not affect the performance of the pressure sensor.

6) **Supply voltage V_{CC}**
$V_{CC,max}$ is the maximum permissible supply voltage, which can be applied without damages.
$V_{CC,min}$ is the minimum required supply voltage, which has to be applied for normal operation.

7) **Working resistance R_L**
Depending on V_S, the maximum working resistance is $R_L \leq (V_S - 10\ V) / 0.02\ A$.

8) **DC break down voltage V_{is}**
The pressure sensor withstands a high voltage between the stainless steel casing and the electrical connection I+ and I– (short circuited) without damage.

9) **Offset I_{CC0}**
The offset I_{CC0} is the signal output $I_{CC}(p = 0)$ at zero pressure.

10) **Signal span (Full Scale)**
Simple output: $I_{FS} = FS = I_{CC}(p_r) - I_{CC0}$
Symmetrical output: $I_{FS} = FS = I_{CC}(+p_r) - I_{CC}(-p_r)$

11) **Non-linearity L (including pressure hysteresis)**
The non-linearity is the deviation of the real sensor characteristic $I_{cc} = f(p)$ from the ideal straight line.
It can be approximated by a polynomial of second order, with the maximum at $p_x = p_r / 2$.
The equation to calculate the non-linearity is:

$$L = \frac{I_{cc}(p_x) - I_{cc0}}{I_{cc}(p_r) - I_{cc0}} - \frac{p_x}{p_r}$$

12) **Response time $t_{10\text{-}90}$**
Delay between a pressure change (10 ... 90% p_r) and the corresponding signal output change (10 ... 90% FS).

13) **Supply voltage rejection SVR**
While varying the supply voltage within the range $V_{CC,min}$ up to $V_{CC,max}$ at constant pressure and temperature, the signal output change will not exceed SVR_{max}.

14) **Temperature hysteresis**
The temperature hysteresis is the change of offset, starting from the value at 25 °C after a temperature change and return to 25 °C. Determined during temperature cycles in operating temperature range (cycles with 1 K/min).

15) **Temperature coefficient of offset TCV_{A0}**
Offset at temperature T_x: $I_{cc0}(T_x) = I_{cc0}(25\ °C) + I_{FS}(25\ °C) \cdot (T_x - 25\ °C) \cdot TCI_{cc0}$
Values are valid within the compensated temperature range $T_{c,min}$ up to $T_{c,max}$
Out of the compensated temperature range, the deviation may increase.

16) **Temperature coefficient of span TCV_{FS}**
Span at temperature T_x: $I_{FS}(T_x) = I_{FS}(25\ °C) \cdot [\ 1 + (T_x - 25\ °C) \cdot TCI_{FS}\ ]$
Values are valid within the compensated temperature range $T_{c,min}$ up to $T_{c,max}$
Out of the compensated temperature range, the deviation may increase.

Cautions and warnings

Storage

The pressure sensors should be stored in their original packaging. They should not be placed in harmful environments such as corrosive gases nor exposed to heat or direct sunlight, which may cause deformations. Similar effects may result from extreme storage temperatures and climatic conditions.
Avoid storing the pressure sensors in an environment where condensation may form or in a location exposed to corrosive gases, which will adversely affect their performance.

Soldering

The thermal capacity of the pressure sensor is normally low, so steps should be taken to minimize the effects of external heat. High temperatures may lead to damage or changes in characteristics.

A non-corrosive type of flux resin should normally be used and complete removal of the flux is recommended. Avoid rapid cooling due to dipping in solvent. Note that the output signal may change if pressure is applied to the terminals during soldering.

Operation

Media compatibility with the pressure sensors must be ensured to prevent their failure (see page 2).
The use of other media can cause damage and malfunction.
Never use them in atmospheres containing explosive liquids or gases.

Ensure pressure equalization to the environment, if relative pressure sensors are used.
Avoid operating the pressure sensors in an environment where condensation may form or in a location exposed to corrosive gases. These environments adversely affect their performance.

If the operating pressure is not within the rated pressure range, it may change the output characteristics.
Be sure that the applicable pressure does not exceed the overpressure, it may damage the pressure sensor.

Do not exceed the maximum rated supply voltage, it may damage the pressure sensor.

Do not exceed the rated storage temperature range, it may damage the pressure sensor.

Temperature variations in both the ambient conditions and the media (liquid or gas) can affect the accuracy of the output signal from the pressure sensors. Be sure to check the operating temperature range and thermal error specification of the pressure sensors to determine their suitability for the application.

Connections must be wired in accordance with the terminal assignment specified in this publication.
Care should be taken as reversed pin connections can damage the pressure sensors or degrade their performance.

Contact between the pressure sensor terminals and metals or other materials may cause errors in the output characteristics.

This listing does not claim to be complete, but merely reflects the experience of EPCOS AG.

Important notes

The following applies to all products named in this publication:

1. Some parts of this publication contain **statements about the suitability of our products for certain areas of application**. These statements are based on our knowledge of typical requirements that are often placed on our products in the areas of application concerned. We nevertheless expressly point out **that such statements cannot be regarded as binding statements about the suitability of our products for a particular customer application.** As a rule, EPCOS is either unfamiliar with individual customer applications or less familiar with them than the customers themselves. For these reasons, it is always ultimately incumbent on the customer to check and decide whether an EPCOS product with the properties described in the product specification is suitable for use in a particular customer application.
2. We also point out that **in individual cases, a malfunction of electronic components or failure before the end of their usual service life cannot be completely ruled out in the current state of the art, even if they are operated as specified.** In customer applications requiring a very high level of operational safety and especially in customer applications in which the malfunction or failure of an electronic component could endanger human life or health (e.g. in accident prevention or life-saving systems), it must therefore be ensured by means of suitable design of the customer application or other action taken by the customer (e.g. installation of protective circuitry or redundancy) that no injury or damage is sustained by third parties in the event of malfunction or failure of an electronic component.
3. **The warnings, cautions and product-specific notes must be observed.**
4. In order to satisfy certain technical requirements, **some of the products described in this publication may contain substances subject to restrictions in certain jurisdictions (e.g. because they are classed as hazardous)**. Useful information on this will be found in our Material Data Sheets on the Internet (www.epcos.com/material). Should you have any more detailed questions, please contact our sales offices.
5. We constantly strive to improve our products. Consequently, **the products described in this publication may change from time to time**. The same is true of the corresponding product specifications. Please check therefore to what extent product descriptions and specifications contained in this publication are still applicable before or when you place an order. We also **reserve the right to discontinue production and delivery of products**. Consequently, we cannot guarantee that all products named in this publication will always be available. The aforementioned does not apply in the case of individual agreements deviating from the foregoing for customer-specific products.
6. Unless otherwise agreed in individual contracts, **all orders are subject to the current version of the "General Terms of Delivery for Products and Services in the Electrical Industry" published by the German Electrical and Electronics Industry Association (ZVEI)**.
7. The trade names EPCOS, BAOKE, Alu-X, CeraDiode, CSMP, CSSP, CTVS, DSSP, MiniBlue, MKK, MLSC, MotorCap, PCC, PhaseCap, PhaseCube, PhaseMod, SIFERRIT, SIFI, SIKOREL, SilverCap, SIMDAD, SIMID, SineFormer, SIOV, SIP5D, SIP5K, ThermoFuse, WindCap are **trademarks registered or pending** in Europe and in other countries. Further information will be found on the Internet at www.epcos.com/trademarks.