MTPS8085M1

Point Source LED

FEATURES
- Point-Source LED
- Emitting Window Dia. φ150 μm
- High-output Power
- Small Temp. Coefficient of PO

APPLICATIONS
- Optical Sensors
- Optical Switches

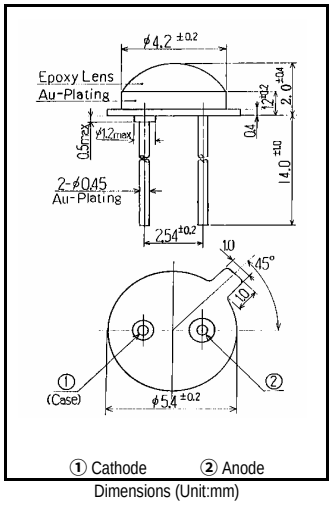

Dimensions (Unit:mm)

1. ABSOLUTE MAXIMUM RATINGS (Ta=25℃)

I T E M	SYMBOL	RATINGS	UNIT
Forward Current (DC)	IF	80	mA
Forward Current (Pulse)*1	IFP	0.8	A
Reverse Voltage	VR	5	V
Power Dissipation	PD	160	mW
Operating Temp.	Topr	-20 TO 85	℃
Storage Temp.	Tstg	-30 TO 100	℃

*1:Tw=10uS,T=10mS

*2:Time 5 Sec max,Position:Up to 3mm from the body

2.ELECTRICAL & OPTICAL CHARACTERISTICS (Ta=25℃)

I T E M	SYMBOL	CONDITIONS	MIN	TYP	MAX	UNIT
Power Output	PO	IF=50mA	4.5	8.0		mW
Forward Voltage	VF	IF=50mA		1.7	2.2	V
Reverse Current	IR	VR=5V			10	μA
Peak Wavelength	λp	IF=50mA		855		nm
Spectral Line Half Width	Δλ	IF=50mA		30		nm
Half Intensity Beam Angle	θ	IF=50mA		±40		deg.

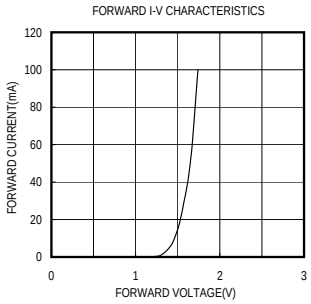

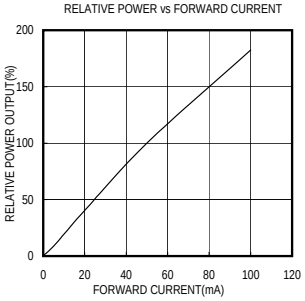

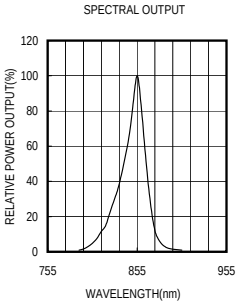

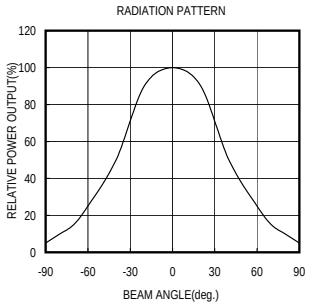

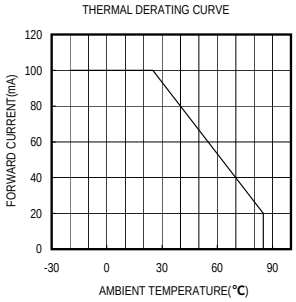

To purchase this part contact
Marktech Optoelectronics at
800.984.5337

Marktech Optoelectronics
www.marktechopto.com

lead-free RoHS

Downloaded from Elcodis.com electronic components distributor