3A Avg. 200 Volts FRED NSF03A20

■最大定格 Maximum Ratings

Item		Symbol	Conditions			Unit
くり返しピーク逆電圧 Repetitive Peak Reverse Voltage		V_{RRM}	200			V
平均整流電流 Average Rectified Forward Current	Alumina Substrate mounted *	I_O	商用周波数，正弦波180度通電 Half Sine Wave, Resistive Load	Ta=25℃	1.61	A
	—			Tl=106℃	3	A
実効順電流 R.M.S. Forward Current		$I_{F(RMS)}$	4.71			A
サージ順電流 Surge Forward Current		I_{FSM}	45 50Hz正弦半波，1サイクル，非くり返し 50Hz Half Sine Wave,1cycle, Non-repetitive			A
動作接合温度範囲 Operating Junction Temperature Range		T_{jw}	−40～+150			℃
保存温度範囲 Storage Temperature Range		T_{stg}	−40～+150			℃

■OUTLINE DRAWING(mm)

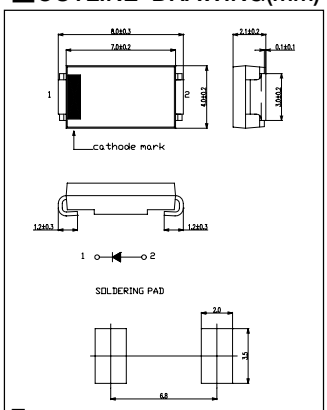

■APPROX. NET WEIGHT:0.16g

■電気的・熱的特性 Electrical/Thermal Characteristics

Item	Symbol	Conditions		Min.	Typ.	Max.	Unit
ピーク逆電流 Peak Reverse Current	I_{RM}	T_j=25℃, $V_{RM}=V_{RRM}$		—	—	10	μA
ピーク順電圧 Peak Forward Voltage	V_{FM}	T_j=25℃, I_{FM}=3A		—	—	0.98	V
逆回復時間 Reverse Recovery Time	trr	I_{FM}=3A, -di/dt=50 A/μs, T_j=25℃		—	—	30	ns
熱抵抗 Thermal Resistance	$R_{th(j-a)}$	接合部・周囲間 Junction to Ambient	Alumina Substrate*	—	—	89	℃/W
	$R_{th(j-l)}$	接合部・リード間 Junction to Lead	—	—	—	13	℃/W

＊Soldering Lands = 2 × 3.5 mm Both Sides

■定格・特性曲線

FIG.1
順電圧特性
FORWARD CURRENT VS. VOLTAGE

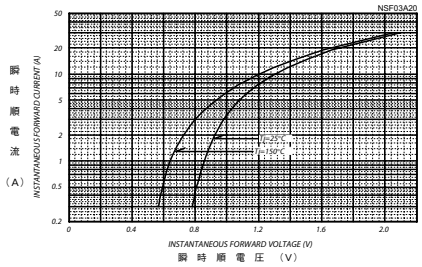

FIG.2
平均順電力損失特性
AVERAGE FORWARD POWER DISSIPATION

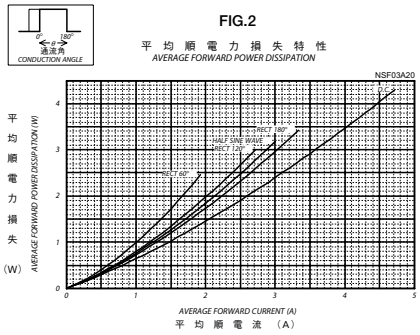

FIG.3
平均順電流－周囲温度定格
AVERAGE FORWARD CURRENT VS. AMBIENT TEMPERATURE
Alumina Substrate Mounted (Soldering Land=2 × 3.5mm)

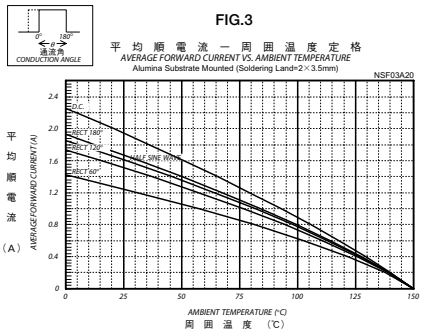

FIG.4
平均順電流－リード温度定格
AVERAGE FORWARD CURRENT VS. LEAD TEMPERATURE

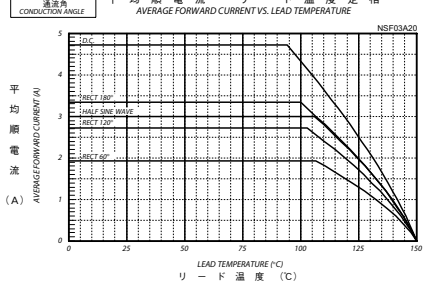

FIG.5
サージ順電流定格
SURGE CURRENT RATINGS
f=50Hz,Half Sine Wave,Non-Repetitive,No Load

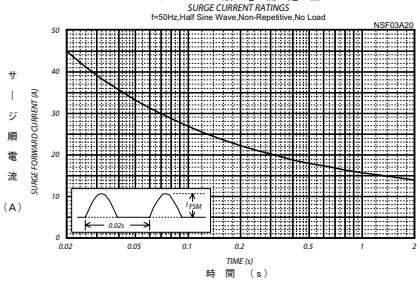

Downloaded from Elcodis.com electronic components distributor