# SDA SERIES SOLID STATE RELAY

**SDA-200C025J-1Z**
**SDA-200C040J-1Z**
**SDA-200C050J-1Z**
**SDA-200C075J-1Z**
**SDA-200C090J-1Z**
**SDA-200C100J-1Z**

**DC Control AC Loading S.S.R**

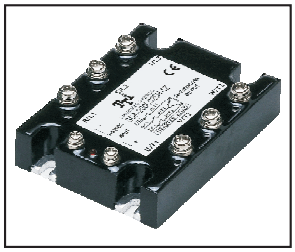

## Specifications

| MODEL SERIES NO. | CONTROL VOLTAGE | MUST TURN OFF VOLTAGE | INPUT IMPEDANCE | LOADING CURRENT | LOADING VOLTAGE | MIN BLOCKING VOLTAGE | MAX OFF-STATE LEAKAGE | FREQUENCY RANGE | MAX 1-CYCLE PEAK SURGE |
|---|---|---|---|---|---|---|---|---|---|
| SDA-200C025J-1Z | 5 - 32 VDC | MAX 3.0 VDC | 1.5 KΩ | 25A | 24 ~ 280VAC | 600VAC | LESS 10 mA | 47-70HZ | 250A |
| SDA-200C040J-1Z | 5 - 32 VDC | MAX 3.0 VDC | 1.5 KΩ | 40A | 24 ~ 280VAC | 600VAC | LESS 10 mA | 47-70HZ | 400A |
| SDA-200C050J-1Z | 5 - 32 VDC | MAX 3.0 VDC | 1.5 KΩ | 50A | 24 ~ 280VAC | 600VAC | LESS 10 mA | 47-70HZ | 500A |
| SDA-200C075J-1Z | 5 - 32 VDC | MAX 3.0 VDC | 1.5 KΩ | 75A | 24 ~ 280VAC | 600VAC | LESS 10 mA | 47-70HZ | 750A |
| SDA-200C090J-1Z | 5 - 32 VDC | MAX 3.0 VDC | 1.5 KΩ | 90A | 24 ~ 280VAC | 600VAC | LESS 10 mA | 47-70HZ | 900A |
| SDA-200C100J-1Z | 5 - 32 VDC | MAX 3.0 VDC | 1.5 KΩ | 100A | 24 ~ 280VAC | 600VAC | LESS 10 mA | 47-70HZ | 1000A |

| MODEL SERIES NO. | MAX OFF STATE dv/dt | MAX ON-STATE VOLTAGE DROP | ISOLATE IMPEDENCE | DIELECTRIC STRENGTH INPUT-OUTPUT | DIELECTRIC STRENGTH INPUT,OUTPUT-CASE | TURN ON TIME | TURN OFF TIME | CAPACITANCE IN-OUT | WEIGHT (g) |
|---|---|---|---|---|---|---|---|---|---|
| SDA-200C025J-1Z | 500 V/μ sec | 1.6Vrms | $10^9$ Ω | 4000 VACrms | 4000 VACrms | LESS 2 msec | LESS ½AC CYCLE | LESS 473 PF | 400 g |
| SDA-200C040J-1Z | 500 V/μ sec | 1.6Vrms | $10^9$ Ω | 4000 VACrms | 4000 VACrms | LESS 2 msec | LESS ½AC CYCLE | LESS 473 PF | 400 g |
| SDA-200C050J-1Z | 500 V/μ sec | 1.6Vrms | $10^9$ Ω | 4000 VACrms | 4000 VACrms | LESS 2 msec | LESS ½AC CYCLE | LESS 473 PF | 400 g |
| SDA-200C075J-1Z | 500 V/μ sec | 1.6Vrms | $10^9$ Ω | 4000 VACrms | 4000 VACrms | LESS 2 msec | LESS ½AC CYCLE | LESS 473 PF | 400 g |
| SDA-200C090J-1Z | 500 V/μ sec | 1.6Vrms | $10^9$ Ω | 4000 VACrms | 4000 VACrms | LESS 2 msec | LESS ½AC CYCLE | LESS 473 PF | 400 g |
| SDA-200C100J-1Z | 500 V/μ sec | 1.6Vrms | $10^9$ Ω | 4000 VACrms | 4000 VACrms | LESS 2 msec | LESS ½AC CYCLE | LESS 473 PF | 400 g |

## Parts No.

**S DA - 200 C 025 J - 1 Z**

- Switching Type : Z = Zero Crossing
- Packing : 1 = Screw Type
- Phase : J = Hearter Load (Three-Phase Two Line)
- Loading Current : 025 = 25A,040 = 40A,050 = 50A
  075 = 75A,090 = 90A,100 = 100A
- Control Voltage : C = 5-32VDC
- Loading Voltage : 200 = 24~280VAC
- Control Type : DA = DC Control AC
- S = S.S.R

## Outline Dimensions(Unit : mm)

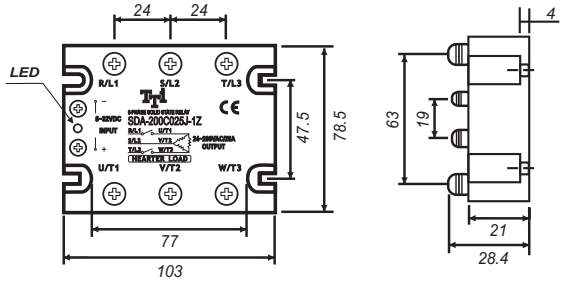


## Equivalent Circuit

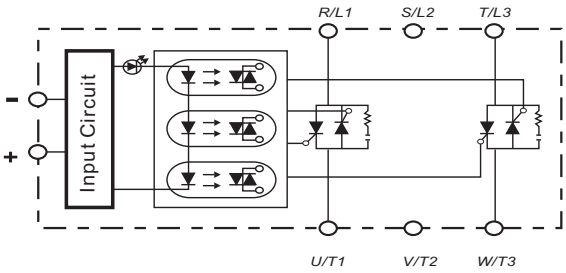


## Example : 3Ø S.S.R Application

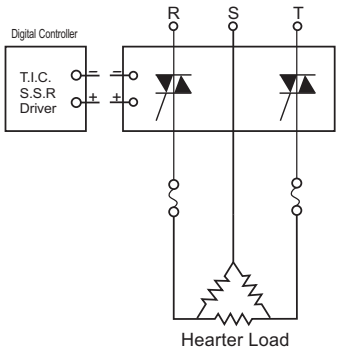


## Characteristic Curves

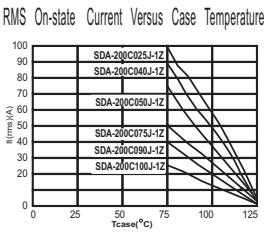


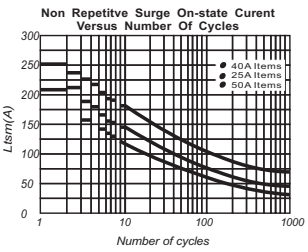


Downloaded from Elcodis.com electronic components distributor