# DATA SHEET

# PEMD10; PUMD10

## NPN/PNP resistor-equipped transistors; R1 = 2.2 kΩ, R2 = 47 kΩ

Product specification
Supersedes data of 2003 Nov 04

2004 Apr 15

Philips
Semiconductors

PHILIPS

# NPN/PNP resistor-equipped transistors; R1 = 2.2 kΩ, R2 = 47 kΩ

# PEMD10; PUMD10

## FEATURES

- Built-in bias resistors
- Simplifies circuit design
- Reduces component count
- Reduces pick and place costs.

## APPLICATIONS

- Low current peripheral driver
- Replacement of general purpose transistors in digital applications
- Control of IC inputs.

## DESCRIPTION

NPN/PNP resistor-equipped transistors (see “Simplified outline, symbol and pinning” for package details).

## QUICK REFERENCE DATA

| SYMBOL | PARAMETER | TYP. | MAX. | UNIT |
|---|---|---|---|---|
| $V_{CEO}$ | collector-emitter voltage | – | 50 | V |
| $I_O$ | output current (DC) | – | 100 | mA |
| TR1 | NPN | – | – | – |
| TR2 | PNP | – | – | – |
| R1 | bias resistor | 2.2 | – | kΩ |
| R2 | bias resistor | 47 | – | kΩ |

## PRODUCT OVERVIEW

| TYPE NUMBER | PACKAGE | | MARKING CODE | PNP/PNP COMPLEMENT | NPN/NPN COMPLEMENT |
|---|---|---|---|---|---|
| | PHILIPS | EIAJ | | | |
| PEMD10 | SOT666 | – | D1 | PEMB10 | PEMH10 |
| PUMD10 | SOT363 | SC-88 | D*0[1] | PUMB10 | PUMH10 |

**Note**

1. * = p: Made in Hong Kong.
   * = t: Made in Malaysia.
   * = W: Made in China.

## SIMPLIFIED OUTLINE, SYMBOL AND PINNING

| TYPE NUMBER | SIMPLIFIED OUTLINE AND SYMBOL | PINNING | |
|---|---|---|---|
| | | PIN | DESCRIPTION |
| PEMD10; PUMD10 | 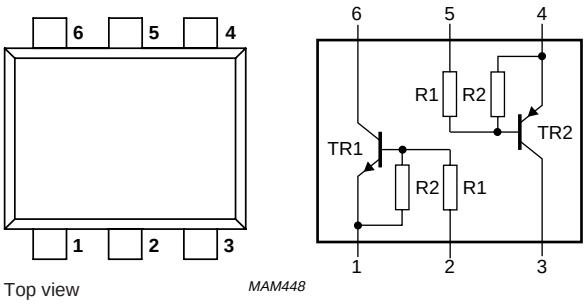  | 1 | emitter TR1 |
| | | 2 | base TR1 |
| | | 3 | collector TR2 |
| | | 4 | emitter TR2 |
| | | 5 | base TR2 |
| | | 6 | collector TR1 |

## ORDERING INFORMATION

| TYPE NUMBER | PACKAGE | | |
|---|---|---|---|
| | NAME | DESCRIPTION | VERSION |
| PEMD10 | – | plastic surface mounted package; 6 leads | SOT666 |
| PUMD10 | – | plastic surface mounted package; 6 leads | SOT363 |

## LIMITING VALUES

In accordance with the Absolute Maximum Rating System (IEC 60134).

| SYMBOL | PARAMETER | CONDITIONS | MIN. | MAX. | UNIT |
|---|---|---|---|---|---|
| **Per transistor; for the PNP transistor with negative polarity** | | | | | |
| $V_{CBO}$ | collector-base voltage | open emitter | – | 50 | V |
| $V_{CEO}$ | collector-emitter voltage | open base | – | 50 | V |
| $V_{EBO}$ | emitter-base voltage | open collector | – | 10 | V |
| $V_I$ | input voltage TR1 | | | | |
| | positive | | – | +12 | V |
| | negative | | – | –5 | V |
| $V_I$ | input voltage TR2 | | | | |
| | positive | | – | +5 | V |
| | negative | | – | –12 | V |
| $I_O$ | output current (DC) | | – | 100 | mA |
| $I_{CM}$ | peak collector current | | – | 100 | mA |
| $P_{tot}$ | total power dissipation | $T_{amb} \leq 25$ °C; | – | – | |
| | SOT363 | note 1 | – | 200 | mW |
| | SOT666 | notes 1 and 2 | – | 200 | mW |
| $T_{stg}$ | storage temperature | | –65 | +150 | °C |
| $T_j$ | junction temperature | | – | 150 | °C |
| $T_{amb}$ | operating ambient temperature | | –65 | +150 | °C |
| **Per device** | | | | | |
| $P_{tot}$ | total power dissipation | $T_{amb} \leq 25$ °C; | – | – | |
| | SOT363 | note 1 | – | 300 | mW |
| | SOT666 | notes 1 and 2 | – | 300 | mW |

**Notes**

1. Transistor mounted on an FR4 printed-circuit board, single-sided copper, standard footprint.
2. Reflow soldering is the only recommended soldering method.

**THERMAL CHARACTERISTICS**

| SYMBOL | PARAMETER | CONDITIONS | VALUE | UNIT |
|---|---|---|---|---|
| **Per transistor** | | | | |
| $R_{th(j-a)}$ | thermal resistance from junction to ambient | | | |
| | SOT363 | note 1 | 625 | K/W |
| | SOT666 | notes 1 and 2 | 625 | K/W |
| **Per device** | | | | |
| $R_{th(j-a)}$ | thermal resistance from junction to ambient | | | |
| | SOT363 | note 1 | 416 | K/W |
| | SOT666 | notes 1 and 2 | 416 | K/W |

**Notes**

1. Transistor mounted on an FR4 printed-circuit board, single-sided copper, standard footprint.
2. Reflow soldering is the only recommended soldering method.

**CHARACTERISTICS**

$T_{amb}$ = 25 °C; unless otherwise specified.

| SYMBOL | PARAMETER | CONDITIONS | MIN. | TYP. | MAX. | UNIT |
|---|---|---|---|---|---|---|
| **Per transistor; for the PNP transistor with negative polarity** | | | | | | |
| $I_{CBO}$ | collector-base cut-off current | $V_{CB}$ = 50 V; $I_E$ = 0 A | – | – | 100 | nA |
| $I_{CEO}$ | collector-emitter cut-off current | $V_{CE}$ = 30 V; $I_B$ = 0 A | – | – | 1 | μA |
| | | $V_{CE}$ = 30 V; $I_B$ = 0 A; $T_j$ = 150 °C | – | – | 50 | μA |
| $I_{EBO}$ | emitter-base cut-off current | $V_{EB}$ = 5 V; $I_C$ = 0 A | – | – | 180 | μA |
| $h_{FE}$ | DC current gain | $V_{CE}$ = 5 V; $I_C$ = 10 mA | 100 | – | – | |
| $V_{CEsat}$ | collector-emitter saturation voltage | $I_C$ = 5 mA; $I_B$ = 0.25 mA | – | – | 100 | mV |
| $V_{i(off)}$ | input-off voltage | $V_{CE}$ = 5 V; $I_C$ = 100 μA | – | 0.6 | 0.5 | V |
| $V_{i(on)}$ | input-on voltage | $V_{CE}$ = 0.3 V; $I_C$ = 5 mA | 1.1 | 0.75 | – | V |
| R1 | input resistor | | 1.54 | 2.2 | 2.86 | kΩ |
| $\frac{R2}{R1}$ | resistor ratio | | 17 | 21 | 26 | |
| $C_c$ | collector capacitance | | | | | |
| | TR1 (NPN) | $V_{CB}$ = 10 V; $I_E$ = $i_e$ = 0 A; f = 1 MHz | – | – | 2.5 | pF |
| | TR2 (PNP) | | – | – | 3 | pF |

## PACKAGE OUTLINES

**Plastic surface mounted package; 6 leads** **SOT666**

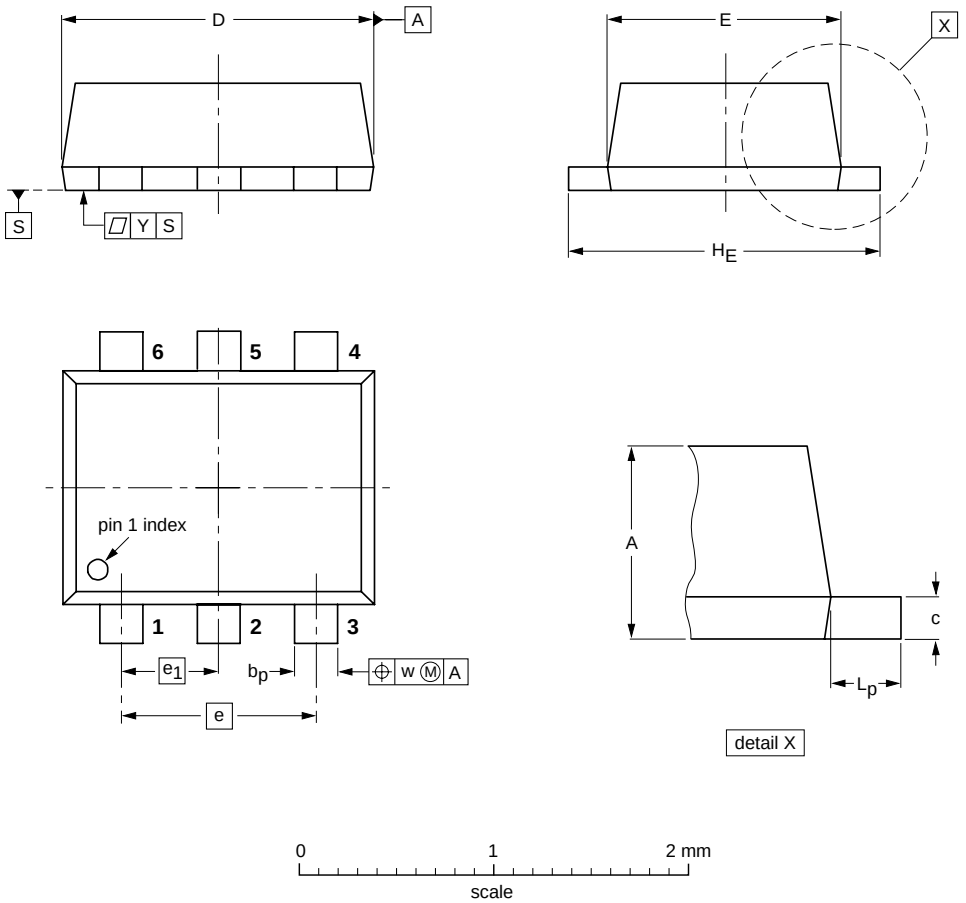


**DIMENSIONS (mm are the original dimensions)**

| UNIT | A | $b_p$ | c | D | E | e | $e_1$ | $H_E$ | $L_p$ | w | y |
|---|---|---|---|---|---|---|---|---|---|---|---|
| mm | 0.6<br>0.5 | 0.27<br>0.17 | 0.18<br>0.08 | 1.7<br>1.5 | 1.3<br>1.1 | 1.0 | 0.5 | 1.7<br>1.5 | 0.3<br>0.1 | 0.1 | 0.1 |

| OUTLINE VERSION | REFERENCES | | | | EUROPEAN PROJECTION | ISSUE DATE |
|---|---|---|---|---|---|---|
| | IEC | JEDEC | EIAJ | | | |
| SOT666 | | | | | | ~~01-01-04~~<br>01-08-27 |

**Plastic surface mounted package; 6 leads** **SOT363**

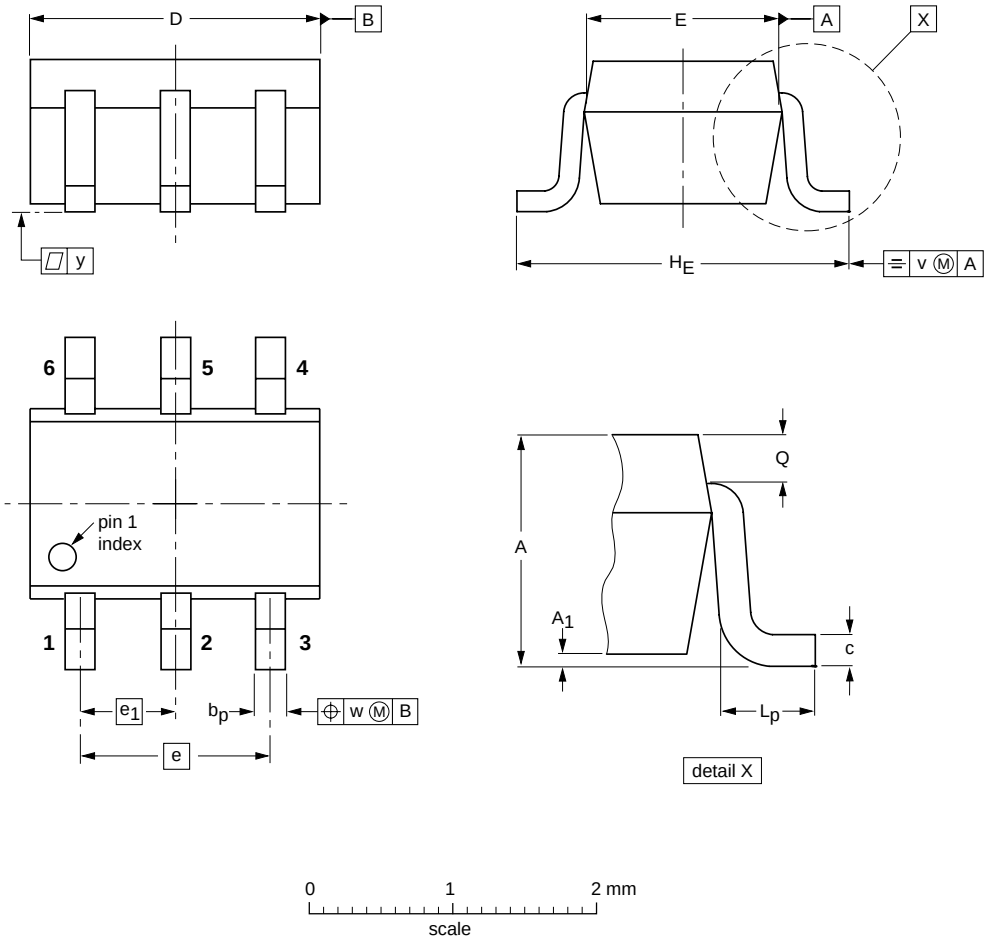


**DIMENSIONS (mm are the original dimensions)**

| UNIT | A | $A_1$ max | $b_p$ | c | D | E | e | $e_1$ | $H_E$ | $L_p$ | Q | v | w | y |
|---|---|---|---|---|---|---|---|---|---|---|---|---|---|---|
| mm | 1.1<br>0.8 | 0.1 | 0.30<br>0.20 | 0.25<br>0.10 | 2.2<br>1.8 | 1.35<br>1.15 | 1.3 | 0.65 | 2.2<br>2.0 | 0.45<br>0.15 | 0.25<br>0.15 | 0.2 | 0.2 | 0.1 |

| OUTLINE VERSION | REFERENCES | | | | EUROPEAN PROJECTION | ISSUE DATE |
|---|---|---|---|---|---|---|
| | IEC | JEDEC | EIAJ | | | |
| SOT363 | | | SC-88 | | | 97-02-28 |

**DATA SHEET STATUS**

| LEVEL | DATA SHEET STATUS(1) | PRODUCT STATUS(2)(3) | DEFINITION |
|---|---|---|---|
| I | Objective data | Development | This data sheet contains data from the objective specification for product development. Philips Semiconductors reserves the right to change the specification in any manner without notice. |
| II | Preliminary data | Qualification | This data sheet contains data from the preliminary specification. Supplementary data will be published at a later date. Philips Semiconductors reserves the right to change the specification without notice, in order to improve the design and supply the best possible product. |
| III | Product data | Production | This data sheet contains data from the product specification. Philips Semiconductors reserves the right to make changes at any time in order to improve the design, manufacturing and supply. Relevant changes will be communicated via a Customer Product/Process Change Notification (CPCN). |

**Notes**

1. Please consult the most recently issued data sheet before initiating or completing a design.
2. The product status of the device(s) described in this data sheet may have changed since this data sheet was published. The latest information is available on the Internet at URL http://www.semiconductors.philips.com.
3. For data sheets describing multiple type numbers, the highest-level product status determines the data sheet status.

**DEFINITIONS**

**Short-form specification** — The data in a short-form specification is extracted from a full data sheet with the same type number and title. For detailed information see the relevant data sheet or data handbook.

**Limiting values definition** — Limiting values given are in accordance with the Absolute Maximum Rating System (IEC 60134). Stress above one or more of the limiting values may cause permanent damage to the device. These are stress ratings only and operation of the device at these or at any other conditions above those given in the Characteristics sections of the specification is not implied. Exposure to limiting values for extended periods may affect device reliability.

**Application information** — Applications that are described herein for any of these products are for illustrative purposes only. Philips Semiconductors make no representation or warranty that such applications will be suitable for the specified use without further testing or modification.

**DISCLAIMERS**

**Life support applications** — These products are not designed for use in life support appliances, devices, or systems where malfunction of these products can reasonably be expected to result in personal injury. Philips Semiconductors customers using or selling these products for use in such applications do so at their own risk and agree to fully indemnify Philips Semiconductors for any damages resulting from such application.

**Right to make changes** — Philips Semiconductors reserves the right to make changes in the products - including circuits, standard cells, and/or software - described or contained herein in order to improve design and/or performance. When the product is in full production (status ‘Production’), relevant changes will be communicated via a Customer Product/Process Change Notification (CPCN). Philips Semiconductors assumes no responsibility or liability for the use of any of these products, conveys no licence or title under any patent, copyright, or mask work right to these products, and makes no representations or warranties that these products are free from patent, copyright, or mask work right infringement, unless otherwise specified.

# *Philips Semiconductors – a worldwide company*

**Contact information**

For additional information please visit **http://www.semiconductors.philips.com**. Fax: **+31 40 27 24825**
For sales offices addresses send e-mail to: **sales.addresses@www.semiconductors.philips.com**.



SCA76



Printed in The Netherlands R75/05/pp9 Date of release: 2004 Apr 15 Document order number: 9397 750 13097

Let's make things better.

Philips
Semiconductors

PHILIPS