T-45-23-21

HARRIS

CD4018B Types

CMOS Presettable Divide-By-'N' Counter

High-Voltage Types (20-Volt Rating)

■ CD4018B types consist of 5 Johnson-Counter stages, buffered Q outputs from each stage, and counter preset control gating. CLOCK, RESET, DATA, PRESET ENABLE, and 5 individual JAM inputs are provided. Divide by 10, 8, 6, 4, or 2 counter configurations can be implemented by feeding the $\overline{Q}5$, $\overline{Q}4$, $\overline{Q}3$, $\overline{Q}2$, $\overline{Q}1$ signals, respectively, back to the DATA input. Divide-by-9, 7, 5; or 3 counter configurations can be implemented by the use of a CD4011B to gate the feedback connection to the DATA input. Divide-by functions greater than 10 can be achieved by use of multiple CD4018B units. The counter is advanced one count at the positive clock-signal transition. Schmitt Trigger action on the clock line permits unlimited clock rise and fall times. A high RESET signal clears the counter to an all-zero condition. A high PRESET-ENABLE signal allows information on the JAM inputs to preset the counter. Anti-lock gating is provided to assure the proper counting sequence.

The CD4018B types are supplied in 16-lead hermetic dual-in-line ceramic packages (D and F suffixes), 16-lead dual-in-line plastic packages (E suffix), and in chip form (H suffix).

Features:

- Medium speed operation . . . . . 10 MHz (typ.) at $V_{DD} - V_{SS} = 10$ V
- Fully static operation
- 100% tested for quiescent current at 20 V
- Standardized, symmetrical output characteristics
- 5-V, 10-V, and 15-V parametric ratings
- Maximum input current of 1 μA at 18 V over full package-temperature range; 100 nA at 18 V and 25°C
- Noise margin (full package-temperature range) = 1 V at V_{DD} = 5 V; 2 V at V_{DD} = 10 V; 2.5 V at V_{DD} = 15 V
- Meets all requirements of JEDEC Tentative Standard No. 13B, "Standard Specifications for Description of 'B' Series CMOS Devices"

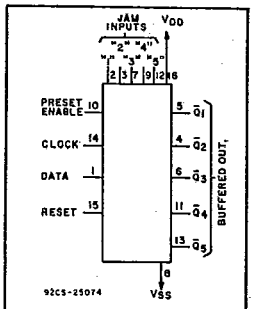

FUNCTIONAL DIAGRAM

Applications:

- Fixed and programmable divide-by-10, 9, 8, 7, 6, 5, 4, 3, 2 counters
- Fixed and programmable counters greater than 10
- Programmable decade counters
- Divide-by-"N" counters/frequency synthesizers
- Frequency division
- Counter control/timers

TERMINAL DIAGRAM
Top View

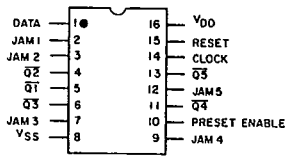

COMMERCIAL CMOS HIGH VOLTAGE ICs

MAXIMUM RATINGS, *Absolute-Maximum Values:*

DC SUPPLY-VOLTAGE RANGE, (V_{DD})
(Voltages referenced to V_{SS} Terminal) ..... -0.5V to +20V
INPUT VOLTAGE RANGE, ALL INPUTS ..... -0.5V to V_{DD} +0.5V
DC INPUT CURRENT, ANY ONE INPUT ..... ±10mA
POWER DISSIPATION PER PACKAGE (P_D):
For T_A = -55°C to +100°C 500mW
For T_A = +100°C to +125°C ..... Derate Linearity at 12mW/°C to 200mW
DEVICE DISSIPATION PER OUTPUT TRANSISTOR
FOR T_A = FULL PACKAGE-TEMPERATURE RANGE (All Package Types) 100mW
OPERATING-TEMPERATURE RANGE (T_A) ..... -55°C to +125°C
STORAGE TEMPERATURE RANGE (T_{stg}) ..... -65°C to +150°C
LEAD TEMPERATURE (DURING SOLDERING):
At distance 1/16 ± 1/32 inch (1.59 ± 0.79mm) from case for 10s max ..... +265°C

T-45-23-21

RECOMMENDED OPERATING CONDITIONS at T_A = 25°C, Unless Otherwise Specified

For maximum reliability, nominal operating conditions should be selected so that operation is always within the following ranges.

CHARACTERISTIC		V_{DD}	Min.	Max.	UNITS
Supply Voltage Range (at T_A = Full Package-Temperature Range)			3	18	V
Clock Input Frequency,	f_{CL}	5 10 15	– – –	3 7 8.5	MHz
Clock Pulse Width,	t_W	5 10 15	160 70 50	– – –	ns
Clock Rise & Fall Time,	t_rCL, t_fCL	5 10 15	Unlimited		μs
Data Input Set-Up Time,	t_S	5 10 15	40 12 16	– – –	ns
Data Input Hold Time,	t_H	5 10 15	140 80 60	– – –	ns
Preset or Reset Pulse Width,	t_W	5 10 15	160 70 50	– – –	ns
Preset or Reset Removal Time		5 10 15	160 60 40	– – –	ns

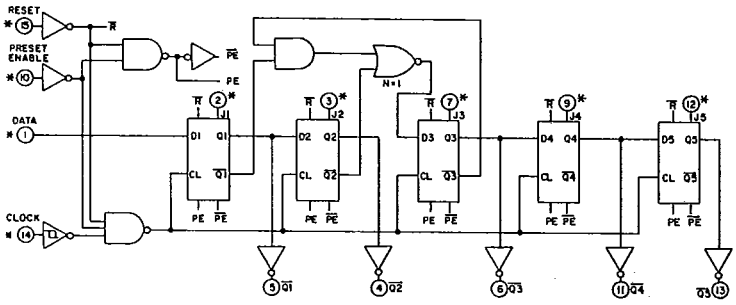

Fig. 1 – Logic diagram.

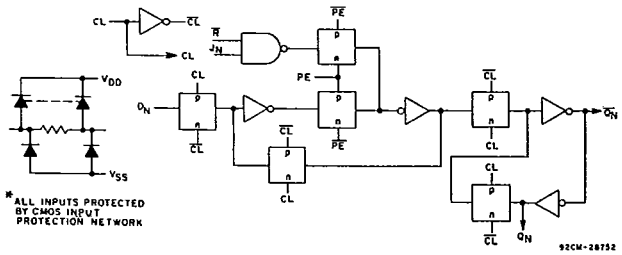

Fig. 2 – Detail of a typical stage.

T-45-23-21

STATIC ELECTRICAL CHARACTERISTICS

CHARACTERISTIC	CONDITIONS			LIMITS AT INDICATED TEMPERATURES (°C)							UNITS
	V_O (V)	V_{IN} (V)	V_{DD} (V)	−55	−40	+85	+125	+25 Min.	+25 Typ.	+25 Max.	
Quiescent Device Current, I_{DD} Max.	–	0,5	5	5	5	150	150	–	0.04	5	μA
	–	0,10	10	10	10	300	300	–	0.04	10	
	–	0,15	15	20	20	600	600	–	0.04	20	
	–	0,20	20	100	100	3000	3000	–	0.08	100	
Output Low (Sink) Current I_{OL} Min.	0.4	0,5	5	0.64	0.61	0.42	0.36	0.51	1	–	mA
	0.5	0,10	10	1.6	1.5	1.1	0.9	1.3	2.6	–	
	1.5	0,15	15	4.2	4	2.8	2.4	3.4	6.8	–	
Output High (Source) Current, I_{OH} Min.	4.6	0,5	5	−0.64	−0.61	−0.42	−0.36	−0.51	−1	–	
	2.5	0,5	5	−2	−1.8	−1.3	−1.15	−1.6	−3.2	–	
	9.5	0,10	10	−1.6	−1.5	−1.1	−0.9	−1.3	−2.6	–	
	13.5	0,15	15	−4.2	−4	−2.8	−2.4	−3.4	−6.8	–	
Output Voltage: Low-Level, V_{OL} Max.	–	0,5	5	0.05				–	0	0.05	V
	–	0,10	10	0.05				–	0	0.05	
	–	0,15	15	0.05				–	0	0.05	
Output Voltage: High-Level, V_{OH} Min.	–	0,5	5	4.95				4.95	5	–	
	–	0,10	10	9.95				9.95	10	–	
	–	0,15	15	14.95				14.95	15	–	
Input Low Voltage V_{IL} Max.	0.5,4.5	–	5	1.5				–	–	1.5	V
	1,9	–	10	3				–	–	3	
	1.5,13.5	–	15	4				–	–	4	
Input High Voltage, V_{IH} Min.	0.5,4.5	–	5	3.5				3.5	–	–	
	1,9	–	10	7				7	–	–	
	1.5,13.5	–	15	11				11	–	–	
Input Current I_{IN} Max.	–	0,18	18	±0.1	±0.1	±1	±1	–	$\pm10^{-5}$	±0.1	μA

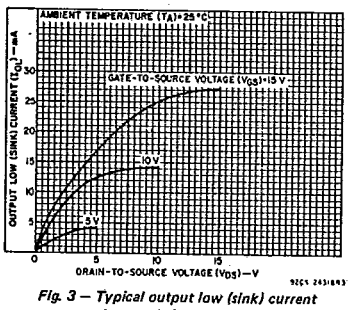

Fig. 3 – Typical output low (sink) current characteristics.

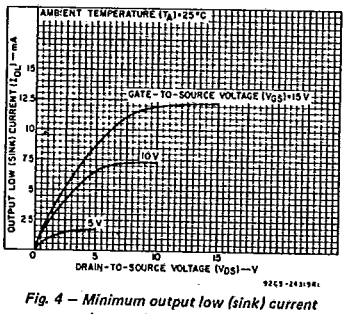

Fig. 4 – Minimum output low (sink) current characteristics.

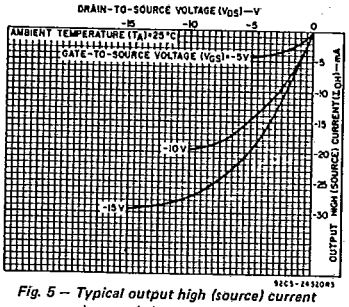

Fig. 5 – Typical output high (source) current characteristics.

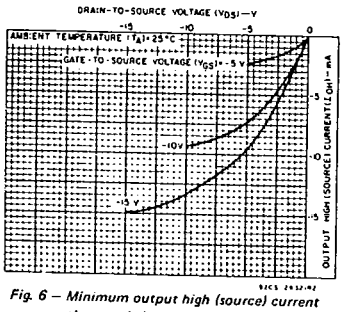

Fig. 6 – Minimum output high (source) current characteristics.

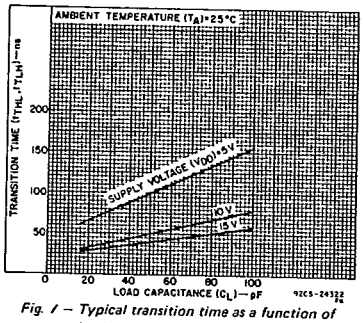

Fig. 7 – Typical transition time as a function of load capacitance.

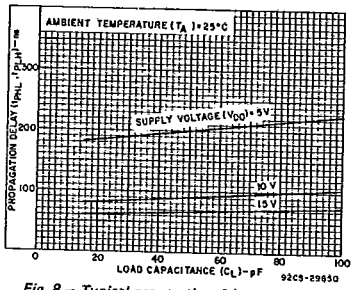

Fig. 8 – Typical propagation delay time as a function of load capacitance (CLOCK to Q).

COMMERCIAL CMOS HIGH VOLTAGE ICs

T-45-23-21

DYNAMIC ELECTRICAL CHARATERISTICS at T_A = 25°C, Input t_r, t_f = 20 ns, C_L = 50 pF, R_L = 200 kΩ

CHARACTERISTIC	TEST CONDITIONS	V_{DD} (V)	LIMITS Min.	Typ.	Max.	UNITS
CLOCKED OPERATION						
Propagation Delay Time; t_{PLH}, t_{PHL}		5	–	200	400	ns
		10	–	90	180	
		15	–	65	130	
Transition Time; t_{THL}, t_{TLH}		5	–	100	200	ns
		10	–	50	100	
		15	–	40	80	
Maximum Clock Input Frequency, f_{CL}		5	3	6	–	MHz
		10	7	14	–	
		15	8.5	17	–	
Minimum Clock Pulse Width, t_W		5	–	80	160	ns
		10	–	35	70	
		15	–	25	50	
Clock Rise & Fall Time; t_rCL, t_fCL		5	Unlimited			μs
		10				
		15				
Minimum Data Input Set-Up Time, t_S		5	–	20	40	ns
		10	–	6	12	
		15	–	3	6	
Minimum Data Input Hold Time, t_H		5	–	70	140	ns
		10	–	40	80	
		15	–	30	60	
Average Input Capacitance, C_I	Any Input		–	5	7.5	pF
PRESET* OR RESET OPERATION						
Propagation Delay Time; Preset or Reset to $\overline{Q}$ t_{PLH}, t_{PHL}		5	–	275	550	ns
		10	–	125	250	
		15	–	90	180	
Minimum Preset or Reset Pulse Width, t_W		5	–	80	160	ns
		10	–	35	70	
		15	–	25	50	
Minimum Preset or Reset Removal Time		5	–	80	160	ns
		10	–	30	60	
		15	–	20	40	

* At PRESET ENABLE or JAM Inputs.

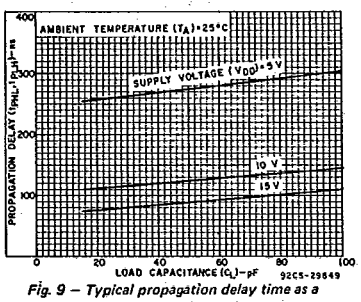

Fig. 9 – Typical propagation delay time as a function of load capacitance (RESET to Q).

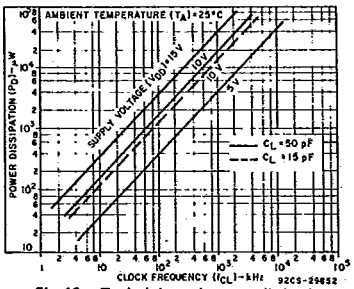

Fig. 10 – Typical dynamic power dissipation as a function of clock input frequency.

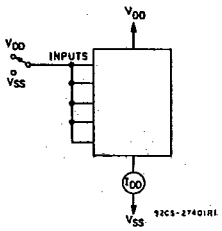

Fig. 11 – Quiescent device current test circuit.

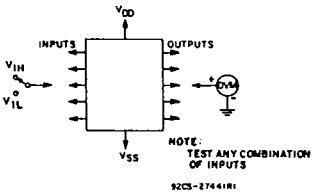

Fig. 12 – Input voltage test circuit.

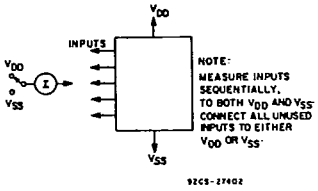

Fig. 13 – Input current test circuit.

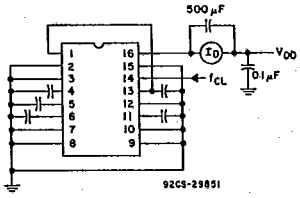

Fig. 14 – Dynamic power dissipation test circuit.

T-45-23-21

("DATA" INPUT TIED TO $\bar{Q}_5$ FOR DECADE COUNTER CONFIGURATION)

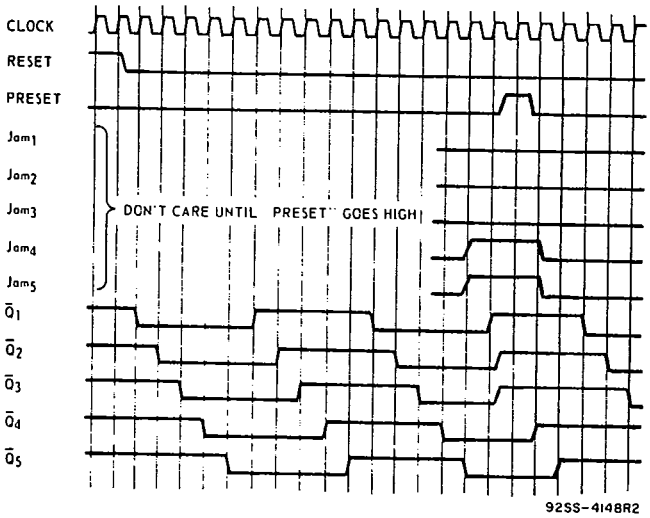

Fig. 15 — Timing diagram.

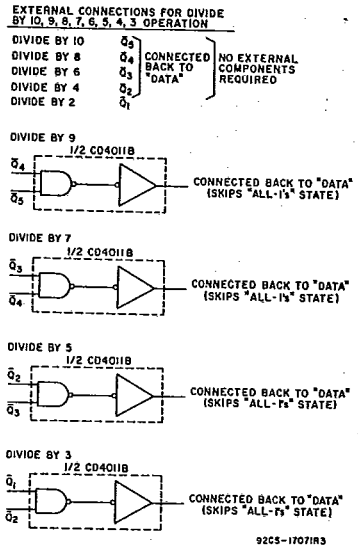

Fig. 16 — External connections for divide by 10, 9, 8, 7, 5, 4, 3, 2 operation.

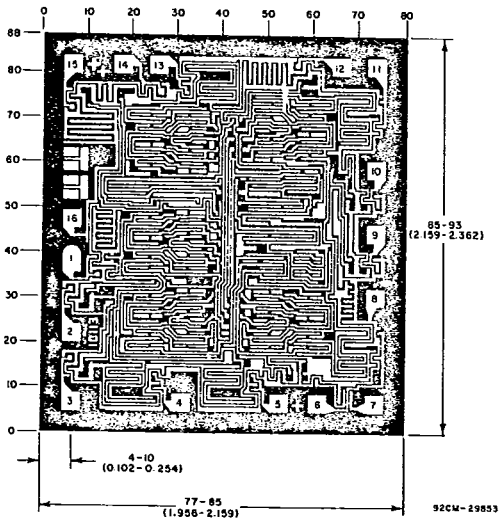

Chip dimensions and pad layout for CD4018B

Dimensions in parentheses are in millimeters and are derived from the basic inch dimensions as indicated. Grid graduations are in mils (10^{-3} inch).

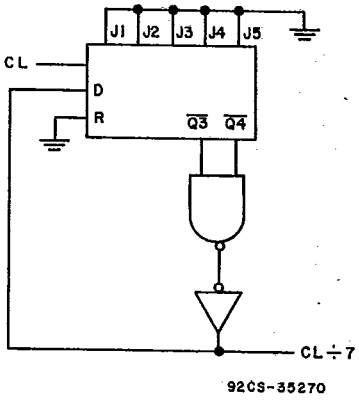

Fig. 17 — Example of divide by 7.