intel®

PRELIMINARY

8XC196KT
COMMERCIAL CHMOS MICROCONTROLLER

- High Performance CHMOS 16-Bit CPU
- Up to 32 Kbytes of On-Chip EPROM
- Up to 1 Kbyte of On-Chip Register RAM
- Up to 512 Bytes of Additional RAM (Internal RAM)
- Register-Register Architecture
- 8 Channel/10-Bit A/D with Sample/Hold
- 37 Prioritized Interrupt Sources
- Up to Seven 8-Bit (56) I/O Ports
- Full Duplex Serial I/O Port
- Dedicated Baud Rate Generator
- Interprocessor Communication Slave Port
- Selectable Bus Timing Modes for Flexible Interfacing
- Oscillator Fail Detection Circuitry
- High Speed Peripheral Transaction Server (PTS)
- Two Dedicated 16-Bit High-Speed Compare Registers
- 10 High Speed Capture/Compare (EPA)
- Full Duplex Synchronous Serial I/O Port (SSIO)
- Two Flexible 16-Bit Timer/Counters
- Quadrature Counting Inputs
- Flexible 8-/16-Bit External Bus (Programmable)
- Programmable Bus (HOLD/HLDA)
- 1.75 μs 16 x 16 Multiply
- 3 μs 32/16 Divide
- 68-Pin PLCC Package

Device	Pins/Package	EPROM	Reg RAM	Code RAM	Address Space	I/O	EPA	A/D
8XC196KT	68-Pin PLCC	32K	1K	512	64 Kbyte	56	10	8

X = 7 EPROM Device
X = 0 ROMless Device

The 8XC196KT 16-bit microcontroller is a high performance member of the MCS®-96 microcontroller family. The 8XC196KT is an enhanced 8XC196KR device with 1000 byte register RAM, 512 bytes internal RAM, 16 MHz operation and an optional 32 Kbytes of ROM/EPROM. Intel's CHMOS III-E process provides a high performance processor along with low power consumption.

The 8XC196KT has a maximum guaranteed frequency of 16 MHz.

Ten high-speed capture/compare modules are provided. As capture modules event times with 250 ns resolution can be recorded and generate interrupts. As compare modules events such as toggling of a port pin, starting an A/D conversion, pulse width modulation, and software timers can be generated. Events can be based on the timer or up/down counter.

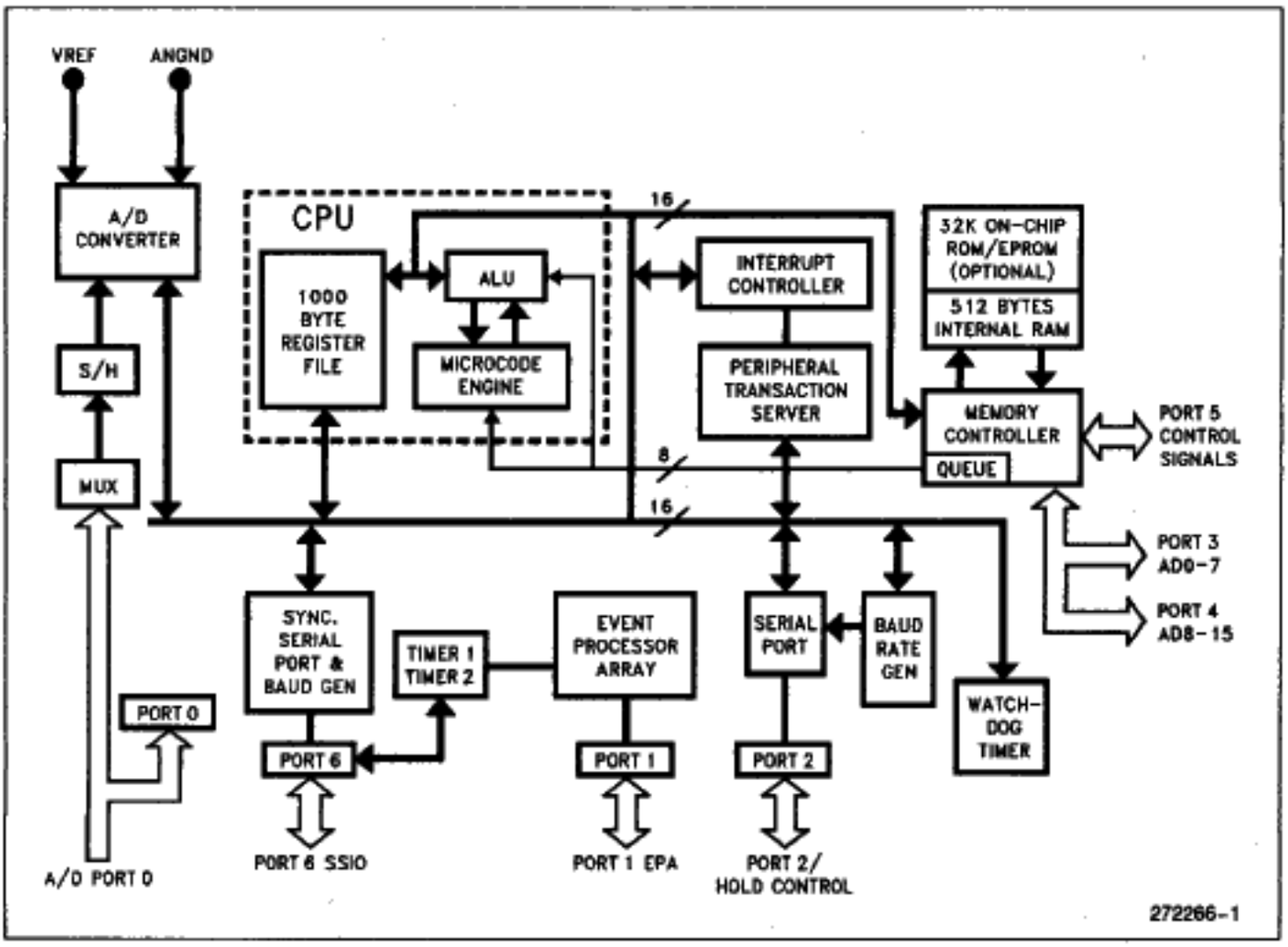

Figure 1. 8XC196KT Block Diagram

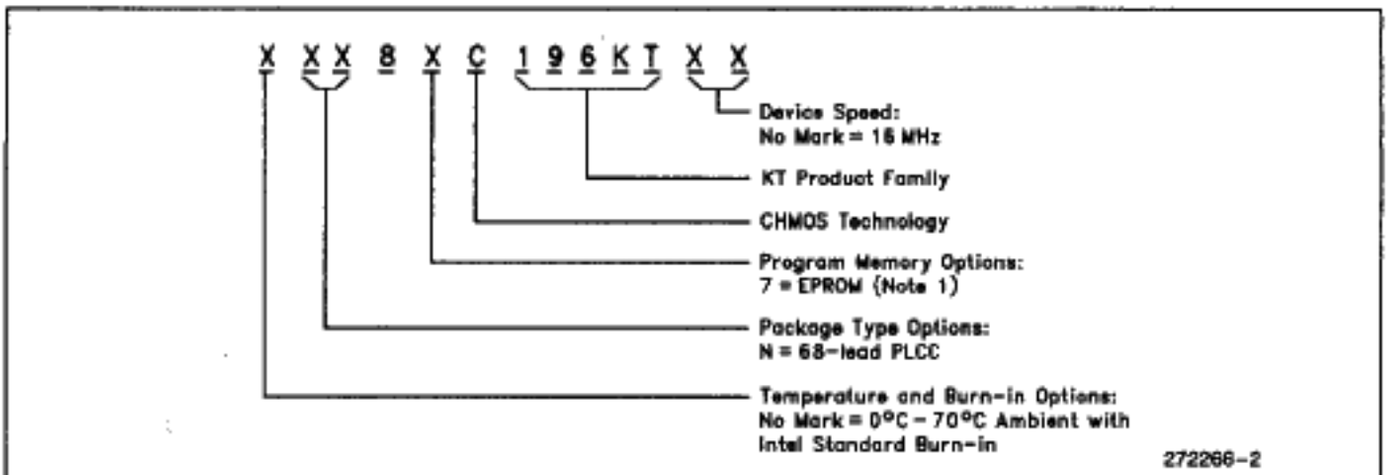

EXAMPLE: N87C196KT is 68-Lead PLCC OTPROM.
For complete package dimensional data, refer to the Intel Packaging Handbok (Order Number 240800).

NOTE:
1. EPROMs are available as One Time Programmable (OTPROM) only.

Figure 2. The 8XC196KT Family Nomenclature

PROCESS INFORMATION

This device is manufactured on PX29.5, a CHMOS III-E process. Additional process and reliability information is available in Intel's *Components Quality and Reliability Handbook*, Order Number 210997.

Table 1. Thermal Characteristics

Package Type	θ_{ja}	θ_{jc}
PLCC	36.5°C/W	13°C/W

All thermal impedance data is approximate for static air conditions at 1W of power dissipation. Values will change depending on operation conditions and application. See the Intel *Packaging Handbook* (Order Number 240800) for a description of Intel's thermal impedance test methodology.

8XC196KT Memory Map

FFFFH A000H	24 Kbytes External Memory	
9FFFH 2080H	Internal EPROM or External Memory	
207FH 2000H	Reserved Memory (Internal EPROM or External Memory)(4, 5)	
1FFFH 1FE0H	Memory Mapped Special Function Registers (SFR's)	
1FDFH 1F00H	Internal Special Function Registers (SFR's)(4)	
1EFFH 0600H	External Memory	
05FFH 0400H	Internal Code or Data RAM (Address with Indirect or Indexed Modes)	
03FFH 0100H	Register RAM	Upper Register File (Address with Indirect or Indexed Modes or through Windows)(1)
00FFH 0018H	Register RAM	Lower Register File (Address with Direct, Indirect, or Indexed Modes)(1, 3)
0017H 0000H	CPU SFR's	

NOTES:
1. Code executed in locations 0000H to 03FFH will be forced external.
2. Reserved memory locations must contain 0FFH unless noted.
3. Reserved SFR bit locations must be written with 0.
4. Refer to 8XC196KT for SFR descriptions.
5. **WARNING:** The contents or functions of reserved memory locations may change with future revisions of the device. Therefore, a program that relies on one or more of these locations may not function properly.

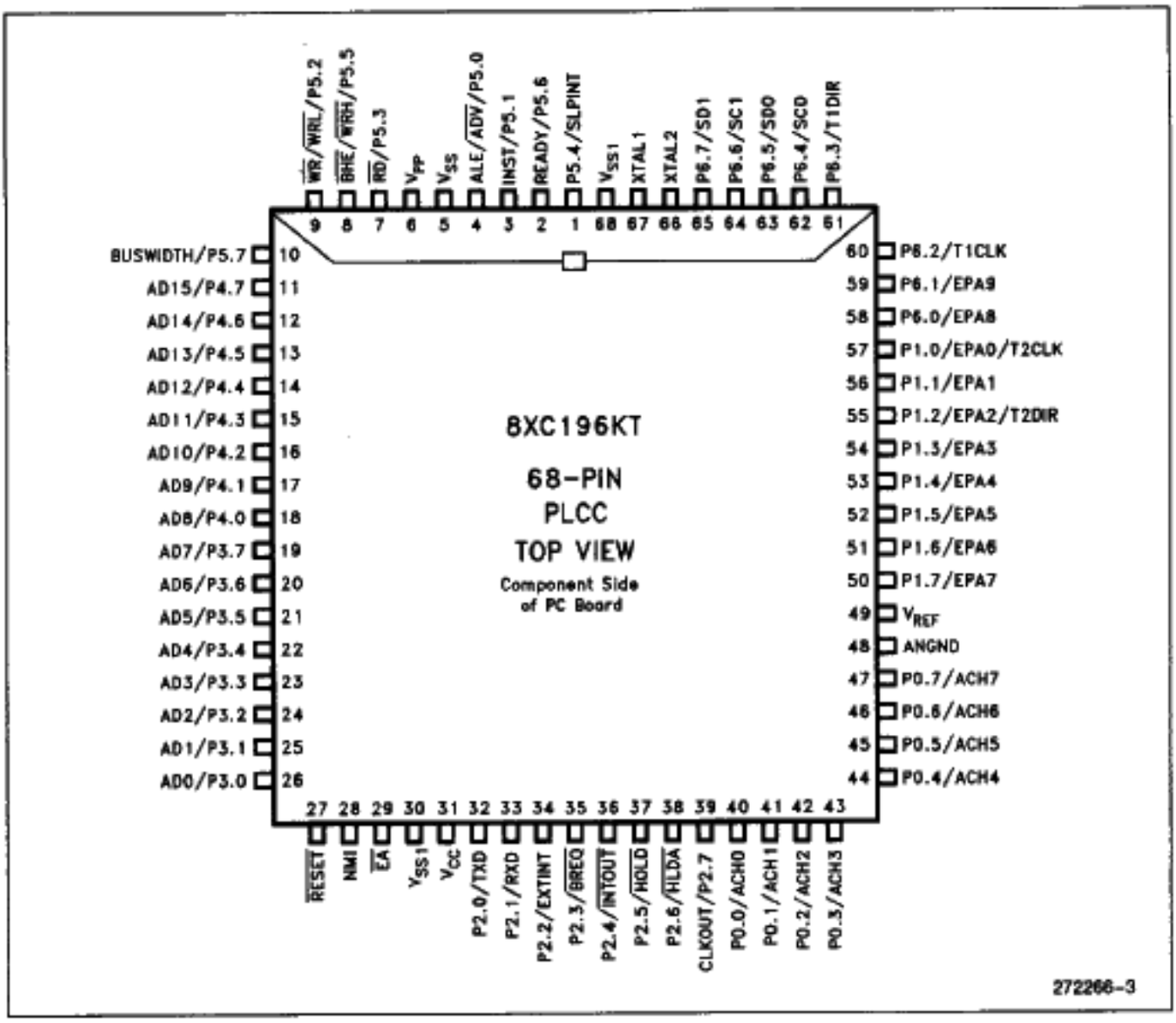
8XC196KT
68-PIN
PLCC
TOP VIEW
Component Side
of PC Board
BUSWIDTH/P5.7 10
AD15/P4.7 11
AD14/P4.6 12
AD13/P4.5 13
AD12/P4.4 14
AD11/P4.3 15
AD10/P4.2 16
AD9/P4.1 17
AD8/P4.0 18
AD7/P3.7 19
AD6/P3.6 20
AD5/P3.5 21
AD4/P3.4 22
AD3/P3.3 23
AD2/P3.2 24
AD1/P3.1 25
AD0/P3.0 26
27 RESET
28 NMI
29 EA
30 VSS1
31 VCC
32 P2.0/TXD
33 P2.1/RXD
34 P2.2/EXTINT
35 P2.3/BREQ
36 P2.4/INTOUT
37 P2.5/HOLD
38 P2.6/HLDA
39 CLKOUT/P2.7
40 P0.0/ACH0
41 P0.1/ACH1
42 P0.2/ACH2
43 P0.3/ACH3
44 P0.4/ACH4
45 P0.5/ACH5
46 P0.6/ACH6
47 P0.7/ACH7
48 ANGND
49 VREF
50 P1.7/EPA7
51 P1.6/EPA6
52 P1.5/EPA5
53 P1.4/EPA4
54 P1.3/EPA3
55 P1.2/EPA2/T2DIR
56 P1.1/EPA1
57 P1.0/EPA0/T2CLK
58 P6.0/EPA8
59 P6.1/EPA9
60 P6.2/T1CLK
61 P6.3/T1DIR
62 P6.4/SCD
63 P6.5/SDO
64 P6.6/SC1
65 P6.7/SD1
66 XTAL2
67 XTAL1
68 VSS1
1 P5.4/SLPINT
2 READY/P5.6
3 INST/P5.1
4 ALE/ADV/P5.0
5 VSS
6 VPP
7 RD/P5.3
8 BHE/WRH/P5.5
9 WR/WRL/P5.2
272266-3

PIN DESCRIPTIONS

Symbol	Name and Function
V_{CC}	Main supply voltage (+5V).
V_{SS}, V_{SSI}, V_{SSI}	Digital circuit ground (0V). There are multiple V_{SS} pins, all of which MUST be connected.
V_{REF}	Reference for the A/D converter (+5V). V_{REF} is also the supply voltage to the analog portion of the A/D converter and the logic used to read Port 0. Must be connected for A/D and Port 0 to function.
V_{PP}	Programming voltage for the EPROM parts. It should be +12.5V for programming. It is also the timing pin for the return from powerdown circuit.
ANGND	Reference ground for the A/D converter. Must be held at nominally the same potential as V_{SS}.
XTAL1	Input of the oscillator inverter and the internal clock generator.
XTAL2	Output of the oscillator inverter.
P.27/CLKOUT	Output of the internal clock generator. The frequency is ½ the oscillator frequency. It has a 50% duty cycle. Also LSIO pin.
$\overline{RESET}$	Reset input to and open-drain output from the chip.
P5.7/BUSWIDTH	Input for bus width selection. If CCR bit 1 is a one and CCR1 bit 2 is a one, this pin dyamically controls the Buswidth of the bus cycle in progress. If BUSWIDTH is low, an 8-bit cycle occurs, if BUSWIDTH is high, a 16-bit cycle occurs. If CCR bit 1 is "0" and CCR1 bit 2 is "1", all bus cycles are 8-bit, if CCR bit 1 is "1" and CCR1 bit 2 is "0", all bus cycles are 16-bit. CCR bit 1 = "0" and CCR1 bit 2 = "0" is illegal. Also an LSIO pin when not used as BUSWIDTH.
NMI	A positive transition causes a non maskable interrupt vector through memory location 203EH.
P5.1/INST	Output high during an external memory read indicates the read is an instruction fetch. INST is valid throughout the bus cycle. INST is active only during external memory fetches, during internal EPROM fetches INST is held low. Also LSIO when not INST.
$\overline{EA}$	Input for memory select (External Access). $\overline{EA}$ equal to a high causes memory accesses to locations 2000H through 9FFFH to be directed to on-chip EPROM/ROM. $\overline{EA}$ equal to a low causes accesses to these locations to be directed to off-chip memory. $\overline{EA}$ = +12.5V causes execution to begin in the Programming Mode. $\overline{EA}$ is latched at reset.
$\overline{HOLD}$	Bus Hold input requesting control of the bus.
$\overline{HLDA}$	Bus hold acknowledge output indicating release of the bus.
$\overline{BREQ}$	Bus request output activated when the bus controller has a pending external memory cycle.
P5.0/ALE/$\overline{ADV}$	Address Latch Enable or Address Valid output, as selected by CCR. Both pin options provide a latch to demultiplex the address from the address/data bus. When the pin is $\overline{ADV}$, it goes inactive (high) at the end of the bus cycle. $\overline{ADV}$ can be used as a chip select for external memory. ALE/$\overline{ADV}$ is active only during external memory accesses. Also LSIO when not used as ALE.
P5.3/$\overline{RD}$	Read signal output to external memory. $\overline{RD}$ is active only during external memory reads or LSIO when not used as $\overline{RD}$.
P5.2/$\overline{WR}$/$\overline{WRL}$	Write and Write Low output to external memory, as selected by the CCR, $\overline{WR}$ will go low for every external write, while $\overline{WRL}$ will go low only for external writes where an even byte is being written. $\overline{WR}$/$\overline{WRL}$ is active during external memory writes. Also an LSIO pin when not used as $\overline{WR}$/$\overline{WRL}$.

PIN DESCRIPTIONS (Continued)

Symbol	Name and Function
P5.5/$\overline{BHE}$/$\overline{WRH}$	Byte High Enable or Write High output, as selected by the CCR. $\overline{BHE}$ = 0 selects the bank of memory that is connected to the high byte of the data bus. A0 = 0 selects that bank of memory that is connected to the low byte. Thus accesses to a 16-bit wide memory can be to the low byte only (A0 = 0, $\overline{BHE}$ = 1), to the high byte only (A0 = 1, $\overline{BHE}$ = 0) or both bytes (A0 = 0, $\overline{BHE}$ = 0). If the $\overline{WRH}$ function is selected, the pin will go low if the bus cycle is writing to an odd memory location. $\overline{BHE}$/$\overline{WRH}$ is only valid during 16-bit external memory write cycles. Also an LSIO pin when not BHE/$\overline{WRH}$.
P5.6/READY	Ready input to lengthen external memory cycles, for interfacing with slow or dynamic memory, or for bus sharing. If the pin is high, CPU operation continues in a normal manner. If the pin is low prior to the falling edge of CLKOUT, the memory controller goes into a wait state mode until the next positive transition in CLKOUT occurs with READY high. When external memory is not used, READY has no effect. The max number of wait states inserted into the bus cycle is controlled by the CCR/CCR1. Also an LSIO pin when READY is not selected.
P5.4/SLPINT	Dual function I/O pin. As a bidirectional port pin or as a system function. The system function is a Slave Port Interrupt Output Pin.
P6.2/T1CLK	Dual function I/O pin. Primary function is that of a bidirectional I/O pin, however, it may also be used as a TIMER1 Clock input. The TIMER1 will increment or decrement on both positive and negative edges of this pin.
P6.3/T1DIR	Dual function I/O pin. Primary function is that of a bidirectional I/O pin, however, it may also be used as a TIMER1 Direction input. The TIMER1 will increment when this pin is high and decrements when this pin is low.
PORT1/EPA0–7 P6.0–6.1/EPA8–9	Dual function I/O port pins. Primary function is that of bidirectional I/O. System function is that of High Speed capture and compare. EPA0 and EPA2 have yet another function of T2CLK and T2DIR of the TIMER2 timer/counter.
PORT 0/ACH0–7	8-bit high impedance input-only port. These pins can be used as digital inputs and/or as analog inputs to the on-chip A/D converter. These pins are also used as inputs to EPROM parts to select the Programming Mode.
P6.3–6.7/SSIO	Dual function I/O ports that have a system function as Synchronous Serial I/O. Two pins are clocks and two pins are data, providing full duplex capability.
PORT 2	8-bit multi-functional port. All of its pins are shared with other functions.
PORT 3 and 4	8-bit bidirectional I/O ports with open drain outputs. These pins are shared with the multiplexed address/data bus which has strong internal pullups.

4826175 0144858 385

ABSOLUTE MAXIMUM RATINGS*

Storage Temperature ..... −60°C to +150°C

Voltage from V_{PP} or $\overline{EA}$ to
V_{SS} or ANGND ..... −0.5V to +13.0V

Voltage from Any Other Pin
to V_{SS} or ANGND ..... −0.5 to +7.0V
This includes V_{PP} on ROM and CPU devices.

Power Dissipation..... 0.5W

NOTICE: This data sheet contains preliminary information on new products in production. The specifications are subject to change without notice. Verify with your local Intel Sales office that you have the latest data sheet before finalizing a design.

**WARNING: Stressing the device beyond the "Absolute Maximum Ratings" may cause permanent damage. These are stress ratings only. Operation beyond the "Operating Conditions" is not recommended and extended exposure beyond the "Operating Conditions" may affect device reliability.*

OPERATING CONDITIONS

Symbol	Parameter	Min	Max	Units
T_A	Ambient Temperature Under Bias	0	+70	°C
V_{CC}	Digital Supply Voltage	4.50	5.50	V
V_{REF}	Analog Supply Voltage	4.50	5.50	V
F_{OSC}	Oscillator Frequency	4	16	MHz (Note 4)

NOTE:
ANGND and V_{SS} should be nominally at the same potential.

DC CHARACTERISTICS (Under Listed Operating Conditions)

Symbol	Parameter	Min	Typ	Max	Units	Test Conditions
I_{CC}	V_{CC} Supply Current			90	mA	XTAL1 = 16 MHz, $V_{CC} = V_{PP} = V_{REF} = 5.5V$
I_{REF}	A/D Reference Supply Current			5	mA	(While device in Reset)
I_{IDLE}	Idle Mode Current			40	mA	XTAL1 = 16 MHz, $V_{CC} = V_{PP} = V_{REF} = 5.5V$
I_{PD}	Powerdown Mode Current		50	75	μA	$V_{CC} = V_{PP} = V_{REF} = 5.5V$(6, 11)
V_{IL}	Input Low Voltage (all pins)	−0.5V		0.3 V_{CC}	V	For PORT0(10)
V_{IH}	Input High Voltage	0.7 V_{CC}		V_{CC} + 0.5	V	For PORT0(10)
V_{IH1}	Input High Voltage XTAL1	0.7 V_{CC}		V_{CC} + 0.5	V	XTAL1 Input Pin Only(1)
V_{IH2}	Input High Voltage on RESET	0.7 V_{CC}		V_{CC} + 0.5	V	RESET input pin only
V_{OL}	Output Low Voltage (Outputs Configured as Complementary)			0.3 0.45 1.5	V V V	I_{OL} = 200 μA(3,5) I_{OL} = 3.2 mA I_{OL} = 7.0 mA
V_{OH}	Output High Voltage (Outputs Configured as Complementary)	V_{CC} − 0.3 V_{CC} − 0.7 V_{CC} − 1.5			V V V	I_{OH} = −200μA(3,5) I_{OH} = −3.2 mA I_{OH} = −7.0 mA
I_{LI}	Input Leakage Current (Std. Inputs)			±10	μA	$V_{SS} < V_{IN} < V_{CC}$
I_{LI1}	Input Leakage Current (Port 0)			±3	μA	$V_{SS} < V_{IN} < V_{REF}$
I_{IL}	Logical 0 Input Current			−70	μA	V_{IN} = 0.45V(1)

DC CHARACTERISTICS (Under Listed Operating Conditions) (Continued)

Symbol	Parameter	Min	Typ	Max	Units	Test Conditions
V_{OH1}	SLPINT (P5.4) and HLDA (P2.6) Output High Voltage in RESET	2.0			V	I_{OH} = 0.8 mA(7)
V_{OH2}	Output High Voltage in RESET	$V_{CC}-1V$			V	I_{OH} = −6 μA(1)
C_S	Pin Capacitance (Any pin to V_{SS})			10	pF	f_{test} = 1.0 MHz(6)
R_{WPU}	Weak Pullup Resistance		150K		Ω	(Note 6)

NOTES:
1. All BD (bidirectional) pins except INST and CLKOUT. INST and CLKOUT are excluded due to their not being weakly pulled high in reset. BD pins include Port1, Port2, Port3, Port4, Port5 and Port6 except SPLINT (P5.4) and HLDA (P2.6).
2. Standard input pins include XTAL1, $\overline{EA}$, RESET, and Port 1/2/5/6 when setup as inputs.
3. All bidirectional I/O pins when configured as Outputs (Push/Pull).
4. Device is static and should operate below 1 Hz, but only tested down to 4 MHz.
5. Maximum I_{OL}/I_{OH} currents per pin will be characterized and published at a later date.
6. Typicals are based on limited number of samples and are not guaranteed. The values listed are at room temperature and $V_{REF} = V_{CC} = 5.0V$.
7. Violating these specifications in reset may cause the device to enter test modes (P5.4 and P2.6).
8. When P0 is used as analog inputs, refer to A/D specifications for this characteristic.
9. For temperatures <100°C typical is 10 μA.

8XC196KT ADDITIONAL BUS TIMING MODES

The 8XC196KT devices have 3 additional bus timing modes for external memory interfacing.

MODE 3:

Mode 3 is the standard timing mode.

MODE 0:

Mode 0 is the standard timing mode, but 1 (minimum) wait state is always inserted in external bus cycles.

MODE 1:

Mode 1 is the long R/W mode. This mode advances $\overline{RD}$ and $\overline{WR}$ signals by 1 T_{OSC} creating a 2 T_{OSC} $\overline{RD}/\overline{WR}$ low time. ALE is also advanced by 0.5 T_{OSC} but ALE high time remains 1 T_{OSC}.

MODE 2:

Mode 2 is the long R/W mode with Early Address. Mode 2 is similar to Mode 1 with respect to RD, WR, and ALE signals. Additionally, the address is output on the bus 0.5 T_{OSC} earlier in the bus cycle.

4826175 0144860 T33

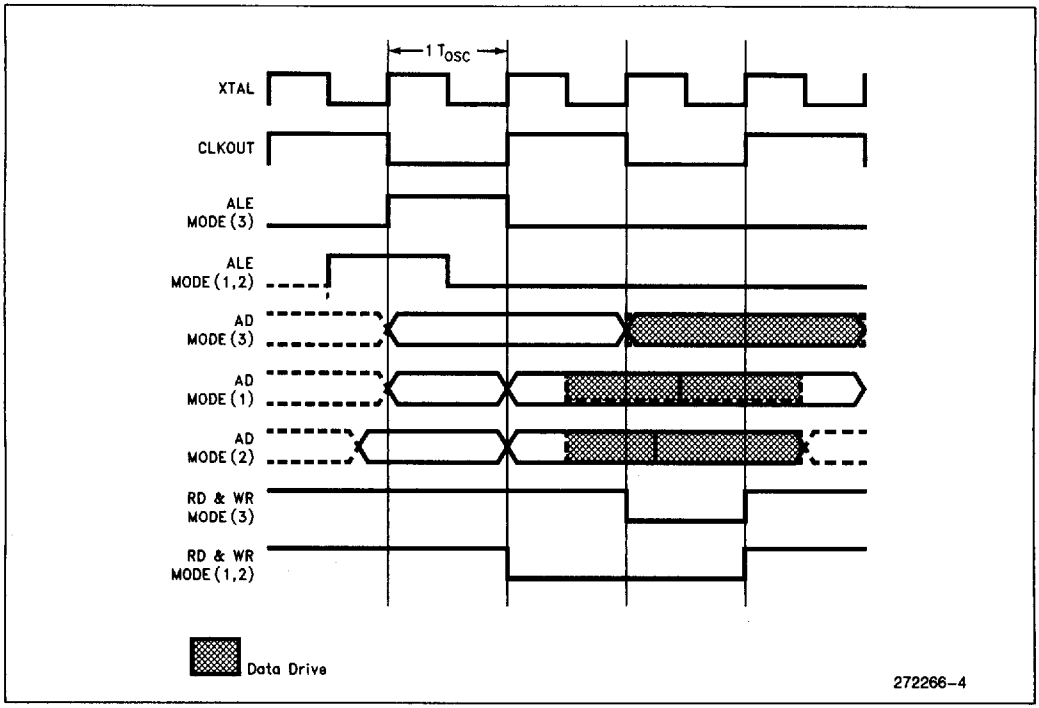

Detailed MODE 1, 2, 3, Comparison

EXPLANATION OF AC SYMBOLS

Each symbol is two pairs of letters prefixed by "T" for time. The characters in a pair indicate a signal and its condition, respectively. Symbols represent the time between the two signal/condition points.

Conditions:
H—High
L—Low
V—Valid
X—No Longer Valid
Z—Floating

Signals:
A—Address
B—$\overline{BHE}$
BR—$\overline{BREQ}$
C—CLKOUT
D—DATA
G—Buswidth
H—$\overline{HOLD}$
HA—$\overline{HLDA}$
L—ALE/$\overline{ADV}$
Q—Data Out
RD—$\overline{RD}$
W—$\overline{WR}$/$\overline{WRH}$/$\overline{WRI}$
X—XTAL1
Y—READY

BUS MODE 0 AND 3 AC CHARACTERISTICS (Over Specified Operating Conditions)

Test Conditions: Capacitance Load on All Pins = 100 pF, Rise and Fall Times = 10 ns.

The system must meet these specifications to work with the 8XC196KT.

Symbol	Parameter	Min	Max	Units
T_{AVYV}	Address Valid to Ready Setup		2 T_{OSC} − 75	ns(3)
T_{LLYV}	ALE Low to READY Setup		T_{OSC} − 70	ns(3)
T_{YLYH}	Non READY Time	No Upper Limit		ns
T_{CLYX}	READY Hold after CLKOUT Low	0	T_{OSC} − 30	ns(1)
T_{AVGV}	Address Valid to BUSWIDTH Setup		2 T_{OSC} − 75	ns(2, 3)
T_{LLGV}	ALE Low to BUSWIDTH Setup		T_{OSC} − 60	ns(2, 3)
T_{CLGX}	BUSWIDTH Hold after CLKOUT Low	0		ns
T_{AVDV}	Address Valid to Input Data Valid		3 T_{OSC} − 55	ns(2)
T_{RLDV}	RD active to input Data Valid		T_{OSC} − 30	ns(2)
T_{CLDV}	CLKOUT Low to Input Data Valid		T_{OSC} − 60	ns
T_{RHDZ}	End of RD to Input Data Float		T_{OSC}	ns
T_{RHDX}	Data Hold after RD High	0		ns

NOTES:
1. If Max is exceeded, additional wait states will occur.
2. If wait states are used, add 2 Tosc × n, where n = number of wait states.
3. If mode 0 is selected, one wait state minimum is always added. If additional wait states are required, add 2 Tosc to the specification.

4826175 0144862 806

BUS MODE 0 AND 3 AC CHARACTERISTICS (Over Specified Operating Conditions) (Continued)

Test Conditions: Capacitance Load on All Pins = 100 pF, Rise and Fall Times = 10 ns.

The 8XC196KT will meet these specifications

Symbol	Parameter	Min	Max	Units
F_{XTAL}	Frequency on XTAL1	4.0	16.0	MHz(1)
T_{OSC}	XTAL1 Period ($1/F_{XTAL}$)	62.5	250	ns
T_{XHCH}	XTAL1 High to CLKOUT High or Low	+20	110	ns
T_{OFD}	Clock Failure to Reset Pulled Low(6)	4	40	µs
T_{CLCL}	CLKOUT Period	2 T_{OSC}		ns
T_{CHCL}	CLKOUT High Period	T_{OSC} − 10	T_{OSC} + 30	ns
T_{CLLH}	CLKOUT Low to ALE/ADV High	−10	+15	ns
T_{LLCH}	ALE/ADV Low to CLKOUT High	−25	+15	ns
T_{LHLH}	ALE/ADV Cycle Time	4 T_{OSC}		ns(5)
T_{LHLL}	ALE/ADV High Time	T_{OSC} − 10	T_{OSC} + 10	ns
T_{AVLL}	Address Valid to ALE Low	T_{OSC} − 15		ns
T_{LLAX}	Address Hold After ALE/ADV Low	T_{OSC} − 40		ns
T_{LLRL}	ALE/ADV Low to RD Low	T_{OSC} − 40		ns
T_{RLCL}	RD Low to CLKOUT Low	+4	+35	ns
T_{RLRH}	RD Low Period	T_{OSC} − 5		ns(5)
T_{RHLH}	RD High to ALE/ADV High	T_{OSC}	T_{OSC} + 25	ns(3)
T_{RLAZ}	RD Low to Address Float		+5	ns
T_{LLWL}	ALE/ADV Low to WR Low	T_{OSC} − 10		ns
T_{CLWL}	CLKOUT Low to WR Low	−10	+25	ns
T_{QVWH}	Data Valid before WR High	T_{OSC} − 23		ns
T_{CHWH}	CLKOUT High to WR High	−10	+15	ns
T_{WLWH}	WR Low Period	T_{OSC} − 30		ns(5)
T_{WHQX}	Data Hold after WR High	T_{OSC} − 30		ns
T_{WHLH}	WR High to ALE/ADV High	T_{OSC} − 10	T_{OSC} + 15	ns(3)
T_{WHBX}	BHE, INST Hold after WR High	T_{OSC} − 10		ns
T_{WHAX}	AD8–15 Hold after WR High	T_{OSC} − 30		ns(4)
T_{RHBX}	BHE, INST Hold after RD High	T_{OSC} − 10		ns
T_{RHAX}	AD8–15 Hold after RD High	T_{OSC} − 30		ns(4)

NOTES:
1. Testing performed at 4.0 MHz, however, the device is static by design and will typically operate below 1 Hz.
2. Typical specifications, not guaranteed.
3. Assuming back-to-back bus cycles.
4. 8-bit bus only.
5. If wait states are used, add 2 Tosc × n, where n = number of wait states. If mode 0 (1 automatic wait state added) operation is selected, add 2 T_{OSC} to specification.
6. T_{OFD} is the time for the oscillator fail detect circuit (OFD) to react to a clock failure. The OFD circuitry is enabled by programming the UPROM location 0778H with the value 0004H. KT customer QROM codes need to equate location 2016H to the value 0CDEH if the oscillator fail detect (OFD) function is desired. Intel manufacturing uses location 2016H as a flag to determine whether or not to program the Clock Detect Enable (CDE) bit. Programming the CDE bit enables oscillator fail detection.

BUS MODE 0 AND 3 8XC196KT SYSTEM BUS TIMING

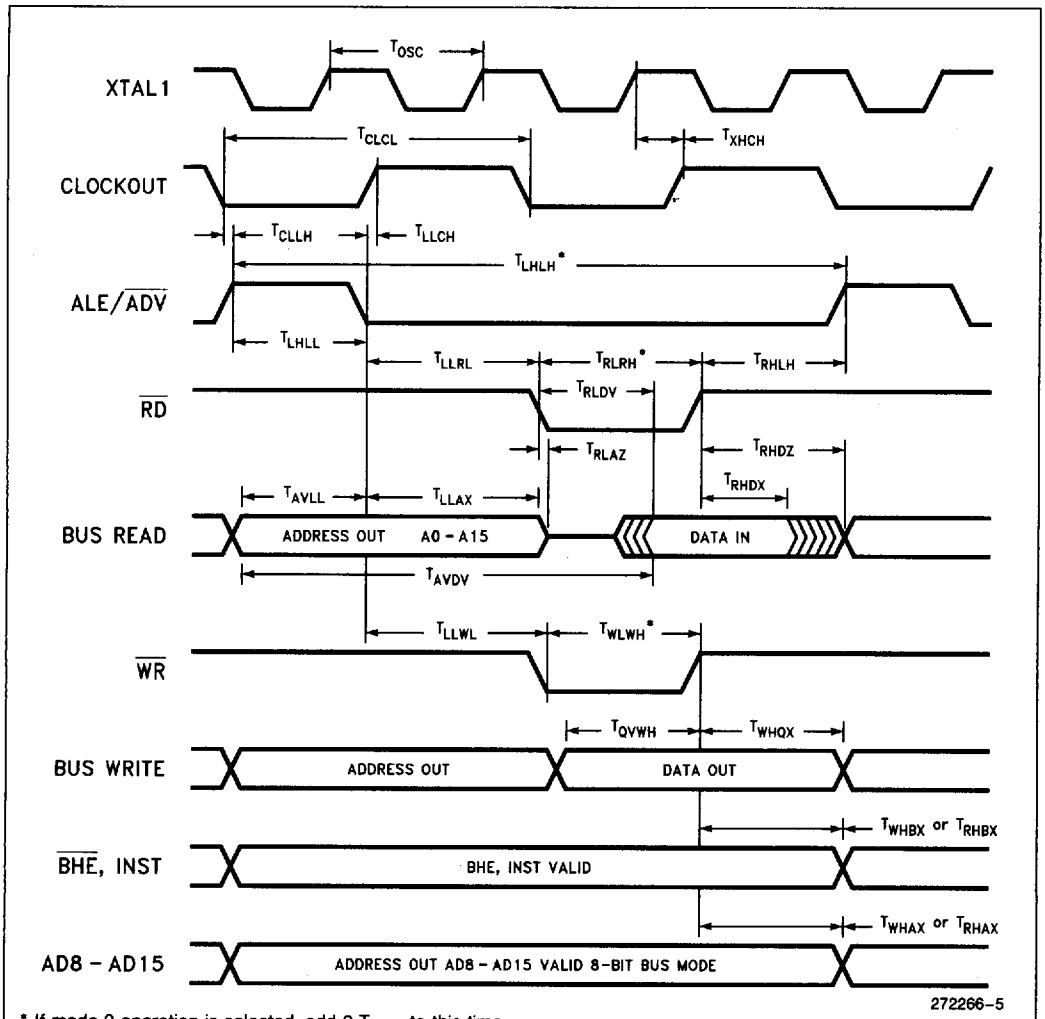

* If mode 0 operation is selected, add 2 T_{OSC} to this time.

4826175 0144864 689

MODE 0 AND 3 8XC196KT READY TIMINGS (ONE WAIT STATE)

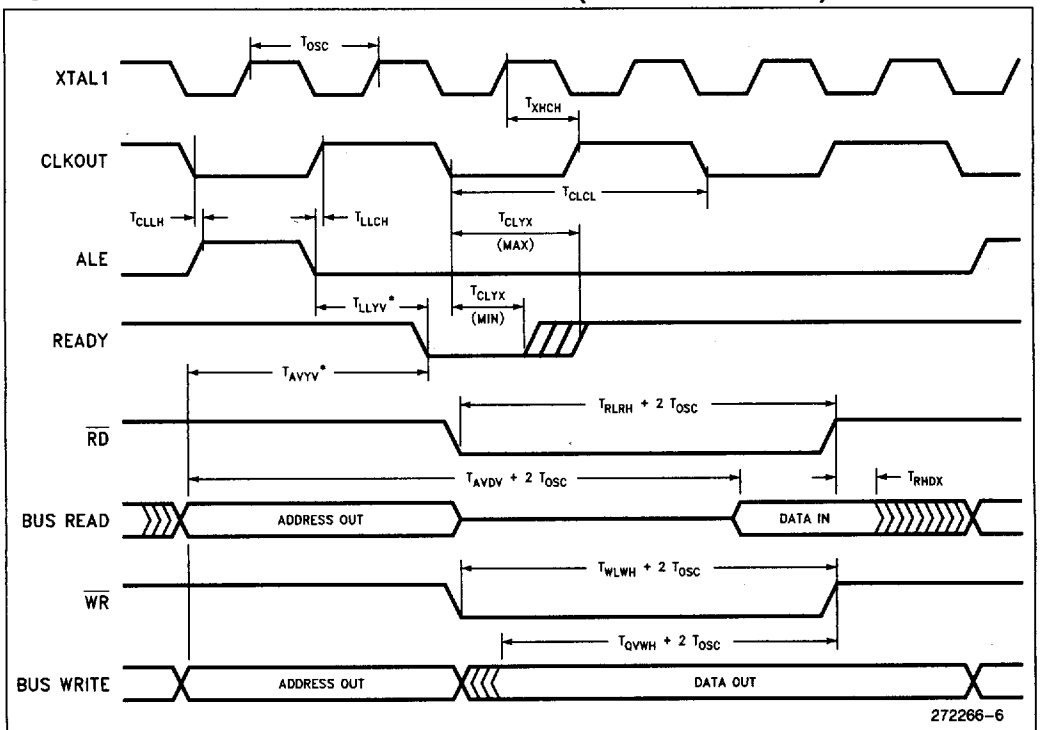

*If mode 0 selected, one wait state is always added. If additional wait states are required, add 2 Tosc to these specifications.

8XC196KT BUSWIDTH TIMINGS

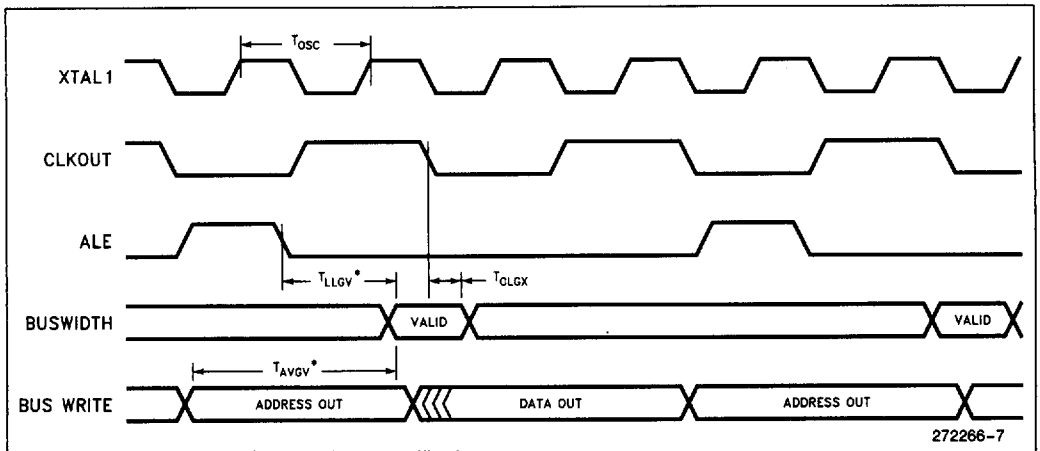

*If mode 0 selected, add 2 T_{OSC} to these specifications.

BUS MODE 1—AC CHARACTERISTICS (Over Specified Operating Conditions)

Test Conditions: Capacitance Load on All Pins = 100 pF, Rise and Fall Times = 10 ns.

The system must meet these specifications to work with the 8XC196KT.

Symbol	Parameter	Min	Max	Units
T_{AVYV}	Address Valid to Ready Setup		2 T_{OSC} − 75	ns
T_{LLYV}	ALE Low to READY Setup		1.5 T_{OSC} − 70	ns
T_{YLYH}	Non READY Time	No Upper Limit		ns
T_{CLYX}	READY Hold after CLKOUT Low	0	T_{OSC} − 30	ns(1)
T_{AVGV}	Address Valid to BUSWIDTH Setup		2 T_{OSC} − 75	nd
T_{LLGV}	ALE Low to BUSWIDTH Setup		$T_{1.5\ OSC}$ − 60	ns
T_{CLGX}	BUSWIDTH Hold after CLKOUT Low	0		ns
T_{AVDV}	Address Valid to Input Data Valid		3 T_{OSC} − 60	ns(2)
T_{RLDV}	RD Active to input Data Valid		T_{OSC} − 44	ns(2)
T_{CLDV}	CLKOUT Low to Input Data Valid		T_{OSC} − 60	ns
T_{RHDZ}	End of RD to Input Data Float		T_{OSC}	ns
T_{RHDX}	Data Hold after RD High	0		ns

NOTES:
1. If Max is exceeded, additional wait states will occur.
2. If wait states are used, add 2 Tosc × n, where n = number of wait states. If mode 0 is selected, one wait state minimum is always added. If additional wait states are required, add 2 Tosc to the specification.

PRELIMINARY

4826175 0144866 451

BUS MODE 1—AC CHARACTERISTICS (Over Specified Operating Conditions)

Test Conditions: Capacitance Load on All Pins = 100 pF, Rise and Fall Times = 10 ns.

The 8XC196KT will meet these specifications

Symbol	Parameter	Min	Max	Units
F_{XTAL}	Frequency on XTAL1	4.0	16.0	MHz(1)
T_{OSC}	XTAL1 Period ($1/F_{XTAL}$)	62.5	250	ns
T_{XHCH}	XTAL1 High to CLKOUT High or Low	+20		ns
T_{CLCL}	CLKOUT Period	2 T_{OSC}		ns
T_{CHCL}	CLKOUT High Period	T_{OSC} − 10	T_{OSC} + 27	ns
T_{CHLH}	CLKOUT High to ALE/ADV High	0.5 T_{OSC} − 15	0.5 T_{OSC} + 15	ns
T_{CLLL}	CLKOUT Low to ALE/ADV Low	0.5 T_{OSC} − 25	0.5 T_{OSC} + 15	ns
T_{LHLH}	ALE/ADV Cycle Time	4 T_{OSC}		ns(5)
T_{LHLL}	ALE/ADV High Time	T_{OSC} − 10	T_{OSC} + 10	ns
T_{AVLL}	Address Valid to ALE Low	0.5 T_{OSC} − 15		ns
T_{LLAX}	Address Hold After ALE/ADV Low	0.5 T_{OSC} − 20		ns
T_{LLRL}	ALE/ADV Low to RD Low	0.5 T_{OSC} − 15		ns
T_{RLCL}	RD Low to CLKOUT Low	T_{OSC} − 10	T_{OSC} + 30	ns
T_{RLRH}	RD Low Period	2T_{OSC} − 20		ns(5)
T_{RHLH}	RD High to ALE/ADV High	0.5 T_{OSC}	0.5 T_{OSC} + 25	ns(3)
T_{RLAZ}	RD Low to Address Float		+5	ns
T_{LLWL}	ALE/ADV Low to WR Low	0.5 T_{OSC} − 10		ns
T_{CLWL}	CLKOUT Low to WR Low	T_{OSC} − 15	T_{OSC} + 25	ns
T_{QVWH}	Data Valid before WR High	2 T_{OSC} − 23		ns
T_{CHWH}	CLKOUT High to WR High	−10	+15	ns
T_{WLWH}	WR Low Period	2 T_{OSC} − 15		ns(5)
T_{WHQX}	Data Hold after WR High	0.5 T_{OSC} − 25		ns
T_{WHLH}	WR High to ALE/ADV High	0.5 T_{OSC} − 10	0.5 T_{OSC} + 10	ns(3)
T_{WHBX}	BHE Hold after WR High	T_{OSC} − 15		ns
T_{WHIX}	INST Hold after WR High	0.5 T_{OSC} − 15		
T_{WHAX}	AD8–15 Hold after WR High	0.5 T_{OSC} − 30		ns(4)
T_{RHBX}	BHE Hold after RD High	T_{OSC} − 32		ns
T_{RHIX}	INST Hold after RD High	0.5 T_{OSC} − 32		
T_{RHAX}	AD8–15 Hold after RD High	0.5 T_{OSC} − 30		ns(4)

NOTES:
1. Testing performed at 8.0 MHz, however, the device is static by design and will typically operate below 1 Hz.
2. Typical specifications, not guaranteed.
3. Assuming back-to-back bus cycles.
4. 8-bit bus only.
5. If wait states are used, add 2 T_{OSC} × n, where n = number of wait states. If mode 0 (1 automatic wait state added) operation is selected, add 2 T_{OSC} to specification.

MODE 1—8XC196KT SYSTEM BUS TIMING

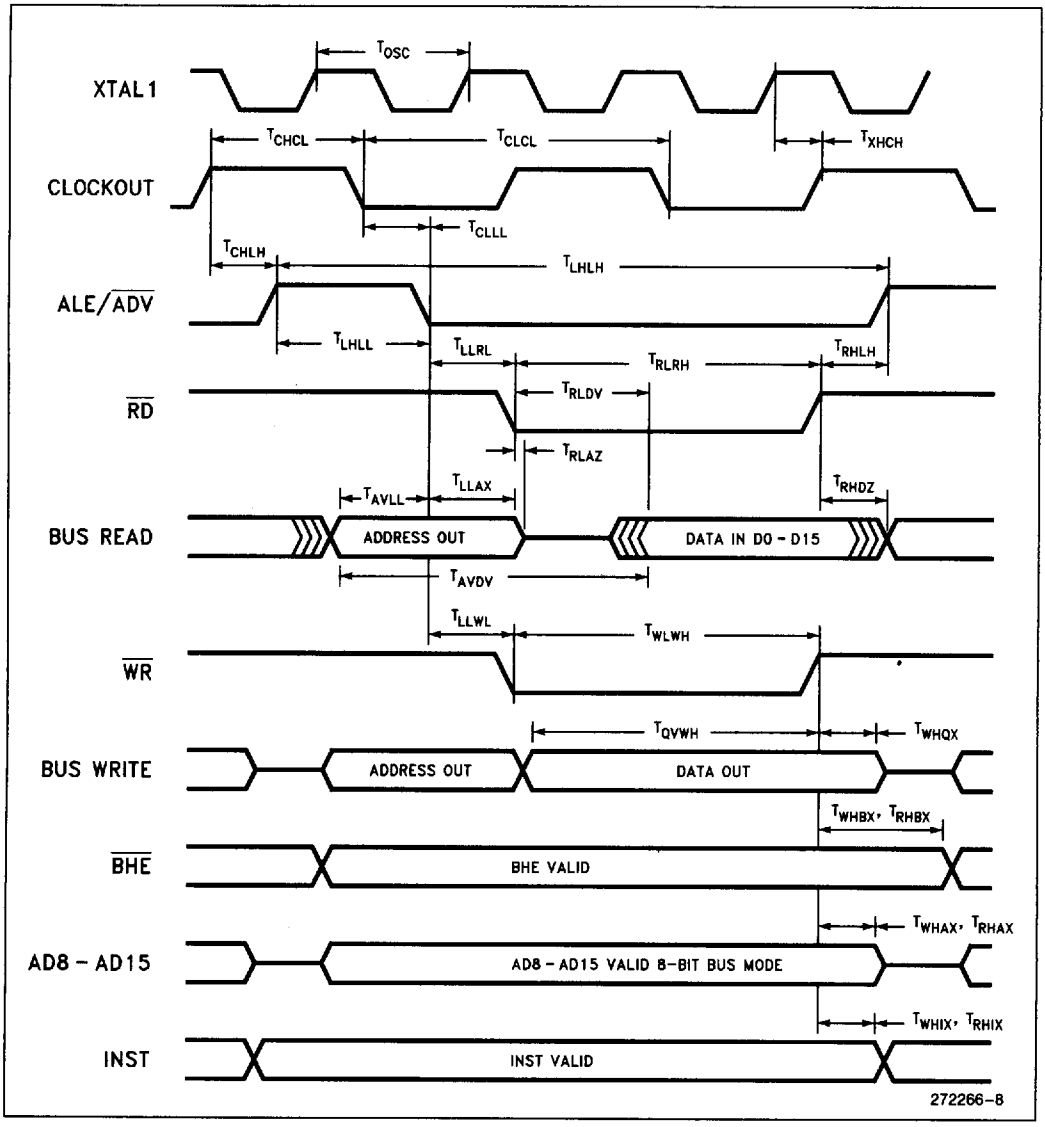

PRELIMINARY

4826175 0144868 224

MODE 1—8XC196KT READY TIMINGS (ONE WAIT STATE)

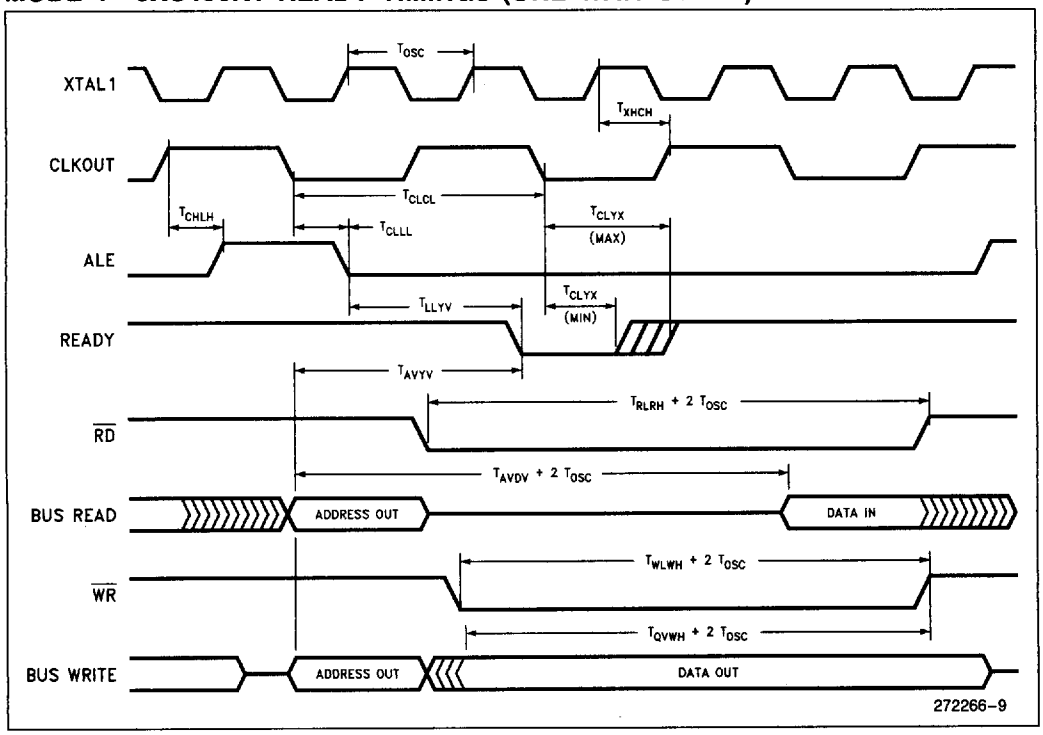

MODE 1—8XC196KT BUSWIDTH TIMINGS

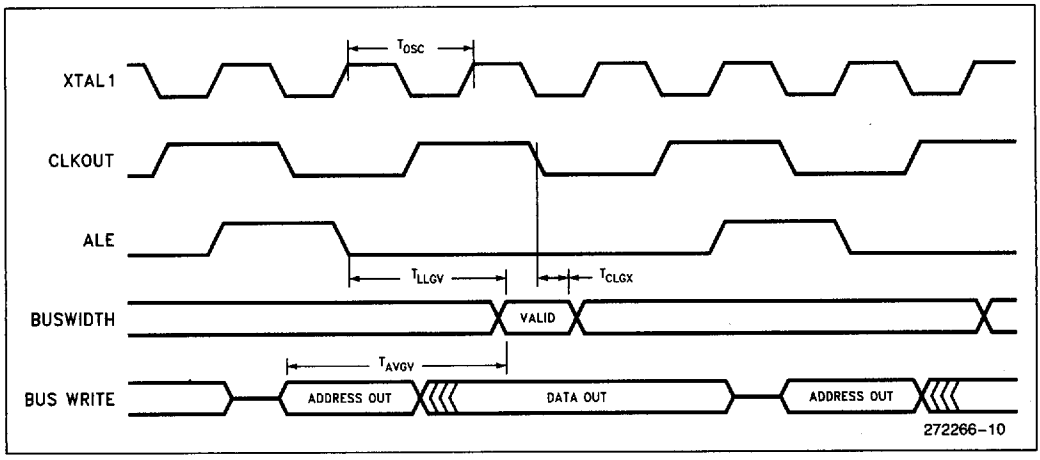

4

BUS MODE 2—AC CHARACTERISTICS (Over Specified Operating Conditions)

Test Conditions: Capacitance Load on All Pins = 100 pF, Rise and Fall Times = 10 ns.

The system must meet these specifications to work with the 8XC196KT.

Symbol	Parameter	Min	Max	Units
T_{AVYV}	Address Valid to Ready Setup		2.5 T_{OSC} − 75	ns
T_{LLYV}	ALE Low to READY Setup		1.5 T_{OSC} − 70	ns
T_{YLYH}	Non READY Time	No Upper Limit		ns
T_{CLYX}	READY Hold after CLKOUT Low	0	T_{OSC} − 30	ns(1)
T_{AVGV}	Address Valid to BUSWIDTH Setup		2.5 T_{OSC} − 75	ns
T_{LLGV}	ALE Low to BUSWIDTH Setup		$T_{1.5\,OSC}$ − 60	ns
T_{CLGX}	BUSWIDTH Hold after CLKOUT Low	0		ns
T_{AVDV}	Address Valid to Input Data Valid		3.5 T_{OSC} − 55	ns(2)
T_{RLDV}	RD Active to Input Data Valid		2 T_{OSC} − 44	ns(2)
T_{CLDV}	CLKOUT Low to Input Data Valid		T_{OSC} − 60	ns
T_{RHDZ}	End of RD to Input Data Float		0.5 T_{OSC}	ns
T_{RHDX}	Data Hold after RD High	0		ns

NOTES:
1. If Max is exceeded, additional wait states will occur.
2. If wait states are used, add 2 Tosc × n, where n = number of wait states. If mode 0 is selected, one wait state minimum is always added. If additional wait states are required, add 2 Tosc to the specification.

4826175 0144870 982

BUS MODE 2—AC CHARACTERISTICS (Over Specified Operating Conditions)

Test Conditions: Capacitance Load on All Pins = 100 pF, Rise and Fall Times = 10 ns.

The 8XC196KT will meet these specifications

Symbol	Parameter	Min	Max	Units
F_{XTAL}	Frequency on XTAL1	8.0	16.0	MHz(1)
T_{OSC}	XTAL1 Period ($1/F_{XTAL}$)	62.5	125	ns
T_{XHCH}	XTAL1 High to CLKOUT High or Low	+20	+85	ns
T_{CLCL}	CLKOUT Period	2 T_{OSC}		ns
T_{CHCL}	CLKOUT High Period	T_{OSC} − 10	T_{OSC} + 27	ns
T_{CHLH}	CLKOUT High to ALE/ADV High	0.5 T_{OSC} − 15	0.5 T_{OSC} + 15	ns
T_{CLLL}	CLKOUT Low to ALE/ADV Low	0.5 T_{OSC} − 25	0.5 T_{OSC} + 15	ns
T_{LHLH}	ALE/ADV Cycle Time	4 T_{OSC}		ns(5)
T_{LHLL}	ALE/ADV High Time	T_{OSC} − 10	T_{OSC} + 10	ns
T_{AVLL}	Address Valid to ALE Low	T_{OSC} − 15		ns
T_{LLAX}	Address Hold After ALE/ADV Low	0.5 T_{OSC} − 20		ns
T_{LLRL}	ALE/ADV Low to RD Low	0.5 T_{OSC} − 15		ns
T_{RLCL}	RD Low to CLKOUT Low	T_{OSC} − 10	T_{OSC} + 30	ns
T_{RLRH}	RD Low Period	2T_{OSC} − 20		ns(5)
T_{RHLH}	RD High to ALE/ADV High	0.5 T_{OSC} − 5	0.5 T_{OSC} + 25	ns(3)
T_{RLAZ}	RD Low to Address Float		+5	ns
T_{LLWL}	ALE/ADV Low to WR Low	0.5 T_{OSC} − 10		ns
T_{CLWL}	CLKOUT Low to WR Low	T_{OSC} − 22	T_{OSC} + 25	ns
T_{QVWH}	Data Valid before WR High	2 T_{OSC} − 25		ns
T_{CHWH}	CLKOUT High to WR High	−10	+15	ns
T_{WLWH}	WR Low Period	2 T_{OSC} − 20		ns(5)
T_{WHQX}	Data Hold after WR High	0.5 T_{OSC} − 25		ns
T_{WHLH}	WR High to ALE/ADV High	0.5 T_{OSC} − 10	0.5 T_{OSC} + 10	ns(3)
T_{WHBX}	BHE Hold after WR High	T_{OSC} − 15		ns
T_{WHIX}	INST Hold after WR High	0.5 T_{OSC} − 15		
T_{WHAX}	AD8–15 Hold after WR High	0.5 T_{OSC} − 30		ns(4)
T_{RHBX}	BHE Hold after RD High	T_{OSC} − 32		ns
T_{RHIX}	INST Hold after RD High	0.5 T_{OSC} − 32		
T_{RHAX}	AD8–15 Hold after RD High	0.5 T_{OSC} − 30		ns(4)

NOTES:
1. Testing performed at 8.0 MHz, however, the device is static by design and will typically operate below 1 Hz.
2. Typical specifications, not guaranteed.
3. Assuming back-to-back bus cycles.
4. 8-bit bus only.
5. If wait states are used, add 2 T_{OSC} × n, where n = number of wait states. If mode 0 (1 automatic wait state added) operation is selected, add 2 T_{OSC} to specification.

MODE 2—8XC196KT SYSTEM BUS TIMING

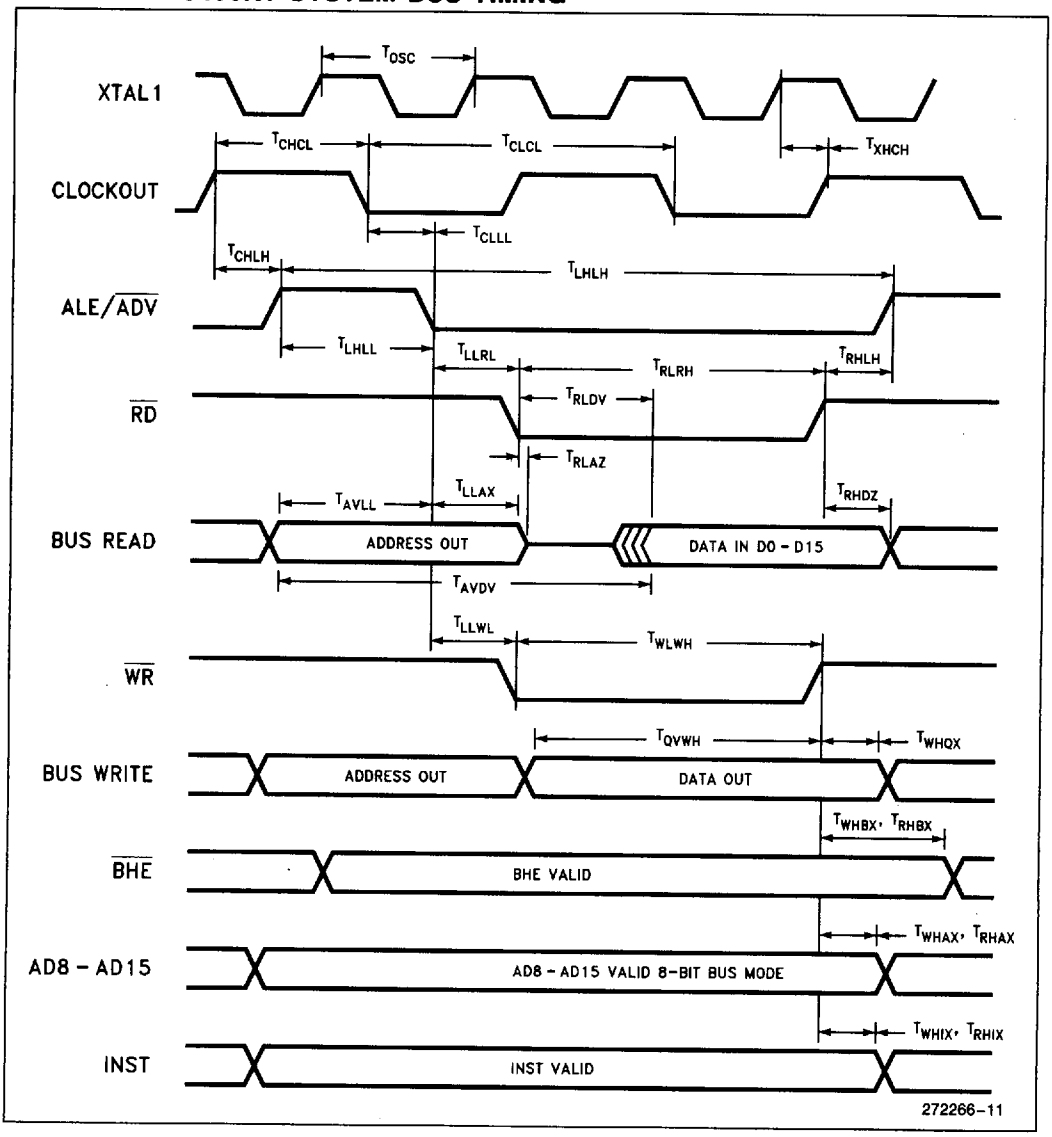

4826175 0144872 755

MODE 2—8XC196KT READY TIMINGS (ONE WAIT STATE)

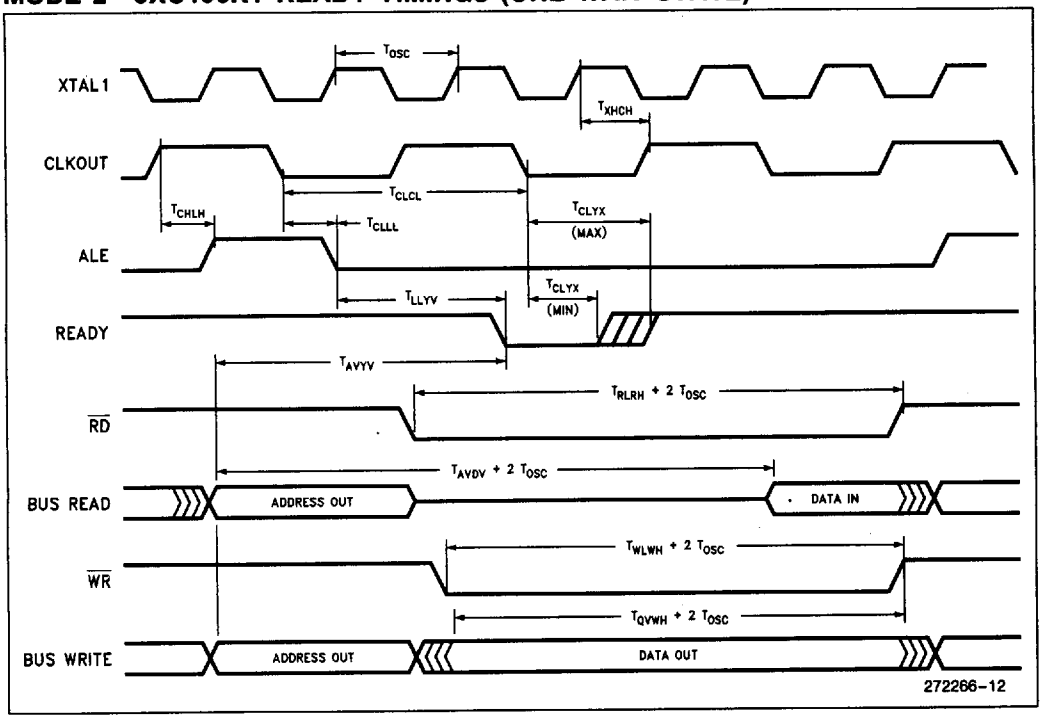

MODE 2—8XC196KT BUSWIDTH TIMINGS

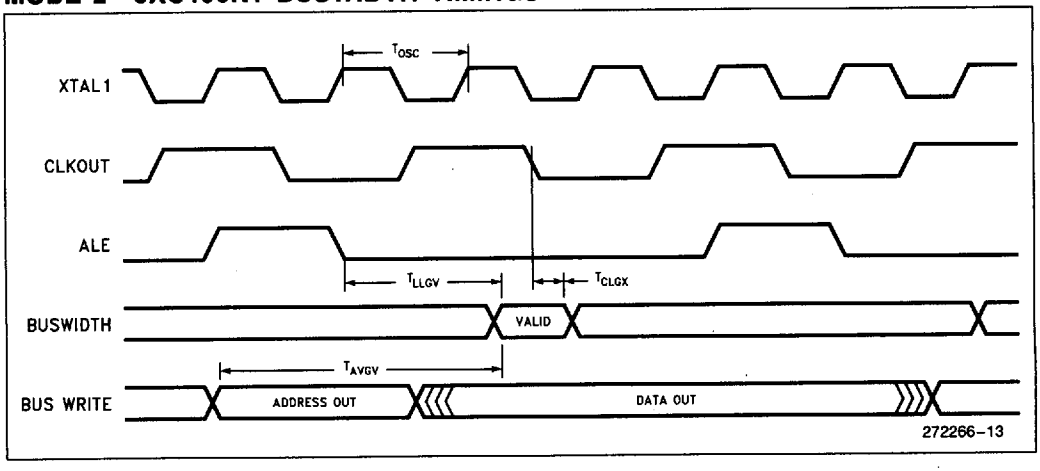

BUS MODE 0, 1, 2, and 3 HOLD/HOLDA TIMINGS (Over Specified Operation Conditions)

Test Conditions: Capacitance Load on All Pins = 100 pF, Rise and Fall Times = 10 ns.

Symbol	Parameter	Min	Max	Units
T_{HVCH}	$\overline{HOLD}$ Setup Time	+65		ns(1)
T_{CLHAL}	CLKOUT Low to $\overline{HLDA}$ Low	−15	+15	ns
T_{CLBRL}	CLKOUT Low to $\overline{BREQ}$ Low	−15	+15	ns
T_{AZHAL}	$\overline{HLDA}$ Low to Address Float		+25	ns
T_{BZHAL}	$\overline{HLDA}$ Low to $\overline{BHE}$, INST, $\overline{RD}$, $\overline{WR}$ Weakly Driven		+25	ns
T_{CLHAH}	CLKOUT Low to $\overline{HLDA}$ High	−25	+15	ns
T_{CLBRH}	CLKOUT Low to $\overline{BREQ}$ High	−25	+25	ns
T_{HAHAX}	$\overline{HLDA}$ High to Address No Longer Float	−15		ns
T_{HAHBV}	$\overline{HLDA}$ High to $\overline{BHE}$, INST, $\overline{RD}$, $\overline{WR}$ Valid	−10		ns

NOTE:
1. To guarantee recognition at next clock.

8XC196KT $\overline{HOLD}$/$\overline{HOLDA}$ TIMINGS

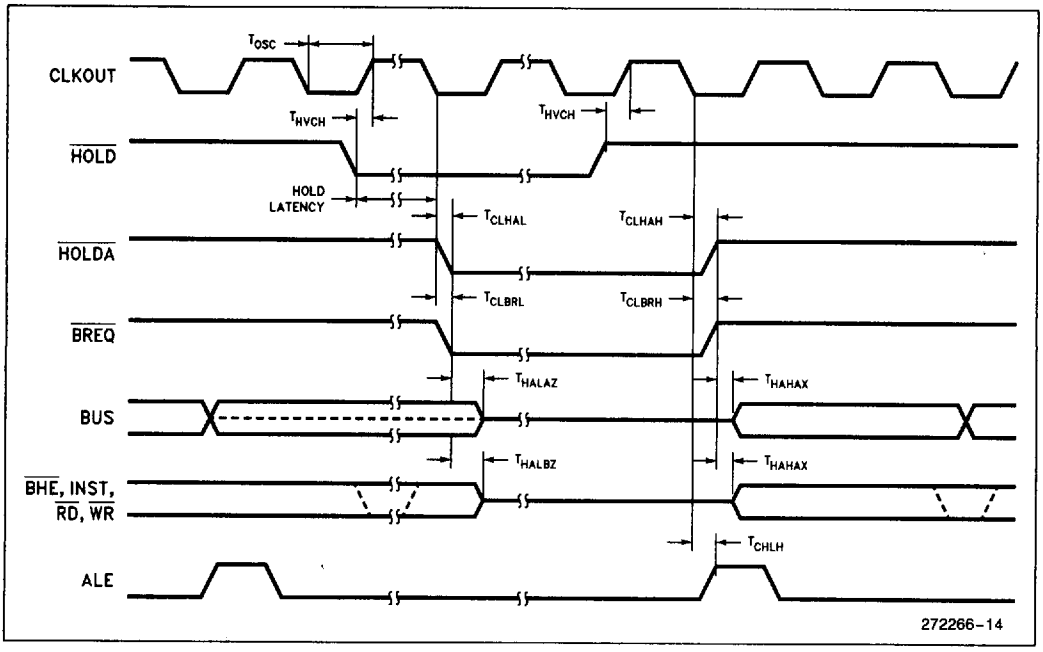

PRELIMINARY

4826175 0144874 528

AC CHARACTERISTICS—SLAVE PORT

SLAVE PORT WAVEFORM—(SLPL = 0)

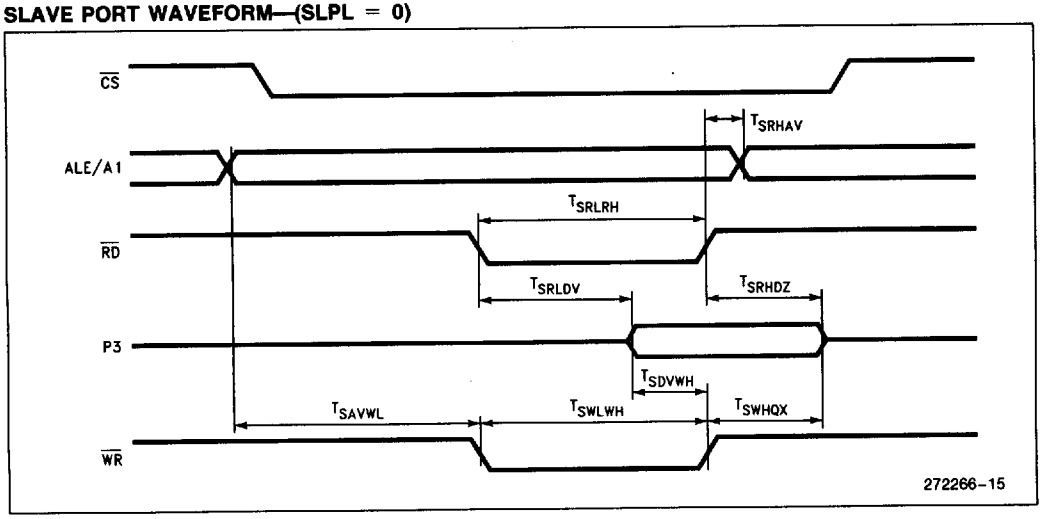

SLAVE PORT TIMING—(SLPL = 0, 1, 2, 3)

Symbol	Parameter	Min	Max	Units
T_{SAVWL}	Address Valid to $\overline{WR}$ Low	50		ns
T_{SRHAV}	$\overline{RD}$ High to Address Valid	60		ns
T_{SRLRH}	$\overline{RD}$ Low Period	T_{OSC}		ns
T_{SWLWH}	$\overline{WR}$ Low Period	T_{OSC}		ns
T_{SRLDV}	$\overline{RD}$ Low to Output Data Valid		60	ns
T_{SDVWH}	Input Data Setup to $\overline{WR}$ High	20		ns
T_{SWHQX}	$\overline{WR}$ High to Data Invalid	30		ns
T_{SRHDZ}	$\overline{RD}$ High to Data Float	15		ns

NOTES:
1. Test Conditions: F_{OSC} = 16 MHz, T_{OSC} = 60 ns. Rise/Fall Time = 10 ns. Capacitive Pin Load = 100 pF.
2. These values are not tested in production, and are based upon theoretical estimates and/or laboratory tests.
3. Specifications above are advanced information and are subject to change.

AC CHARACTERISTICS—SLAVE PORT (Continued)

SLAVE PORT WAVEFORM—(SLPL = 1)

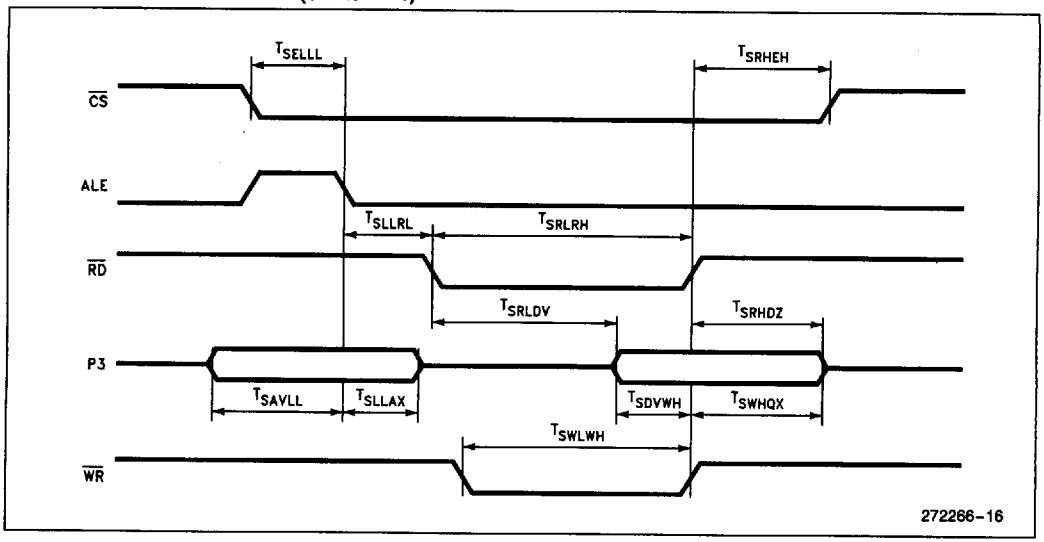

SLAVE PORT TIMING—(SLPL = 1, 2, 3)

Symbol	Parameter	Min	Max	Units
T_{SELLL}	$\overline{CS}$ Low to ALE Low	20		ns
T_{SRHEH}	$\overline{RD}$ or $\overline{WR}$ High to $\overline{CS}$ High	60		ns
T_{SLLRL}	ALE Low to $\overline{RD}$ Low	T_{OSC}		ns
T_{SRLRH}	$\overline{RD}$ Low Period	T_{OSC}		ns
T_{SWLWH}	$\overline{WR}$ Low Period	T_{OSC}		ns
T_{SAVLL}	Address Valid to ALE Low	20		ns
T_{SLLAX}	ALE Low to Address Invalid	20		ns
T_{SRLDV}	$\overline{RD}$ Low to Output Data Valid		60	ns
T_{SDVWH}	Input Data Setup to $\overline{WR}$High	20		ns
T_{SWHQX}	$\overline{WR}$ High to Data Invalid	30		ns
T_{SRHDZ}	$\overline{RD}$ High to Data Float	15		ns

NOTES:
1. Test Conditions: F_{OSC} = 16 MHz, T_{OSC} = 60 ns. Rise/Fall Time = 10 ns. Capacitive Pin Load = 100 pF.
2. These values are not tested in production, and are based upon theoretical estimates and/or laboratory tests.
3. Specifications above are advanced information and are subject to change.

4826175 0144876 3T0

EXTERNAL CLOCK DRIVE

Symbol	Parameter	Min	Max	Units
$1/T_{XLXL}$	Oscillator Frequency	4	16	MHz
T_{XLXL}	Oscillator Period (T_{OSC})	62.5	250	ns
T_{XHXX}	High Time	$0.35 \times T_{OSC}$	$0.65\ T_{OSC}$	ns
T_{XLXX}	Low Time	$0.35 \times T_{OSC}$	$0.65\ T_{OSC}$	ns
T_{XLXH}	Rise Time		10	ns
T_{XHXL}	Fall Time		10	ns

EXTERNAL CLOCK DRIVE WAVEFORMS

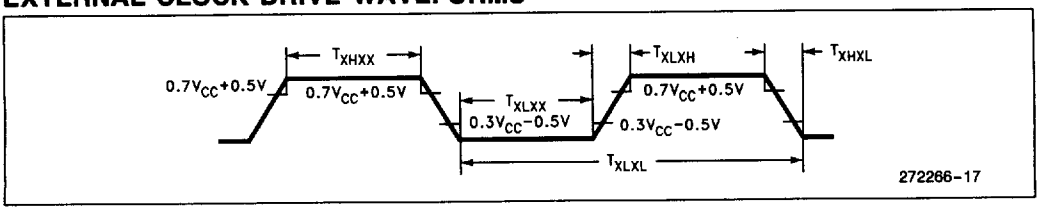

AC TESTING INPUT, OUTPUT WAVEFORMS

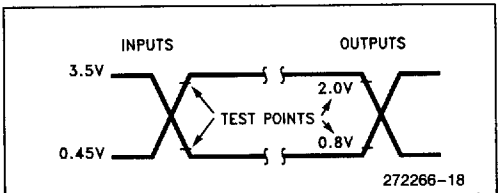

AC Testing inputs are driven at 3.5V for a logic "1" and 0.45V for a logic "0". Timing measurements are made at 2.0V for a logic "1" and 0.8V for logic "0".

FLOAT WAVEFORMS

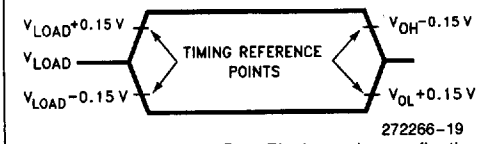

For timing purposes a Port Pin is no longer floating when a 150 mV change from load voltage occurs and begins to float when a 150 mV change from the loading V_{OH}/V_{OL} level occurs $I_{OL}/I_{OH} \leq 15$ mA.

WAVEFORM—SERIAL PORT—SHIFT REGISTER MODE

SERIAL PORT WAVEFORM—SHIFT REGISTER MODE

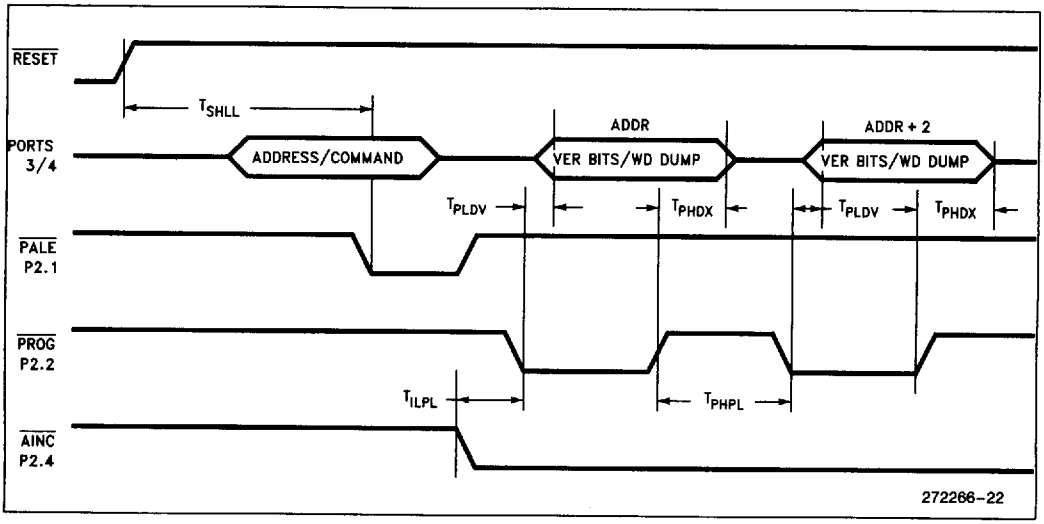

AC CHARACTERISTICS—SERIAL PORT-SHIFT REGISTER MODE

SERIAL PORT TIMING—SHIFTING REGISTER MODE

Test Conditions: T_A = −40°C to +125°C; V_{CC} = 5.0V ±10%; V_{SS} = 0.0V; Load Capacitance = pF

Symbol	Parameter	Min	Max	Units
T_{XLXL}	Serial Port Clock Period	8 T_{OSC}		ns
T_{XLXH}	Serial Port Clock Falling Edge to Rising Edge	4 T_{OSC} − 50	T_{OSC} + 50	ns
T_{QVXH}	Output Data Setup to Clock Rising Edge	3 T_{OSC}		ns
T_{XHQX}	Output Data Hold after Clock Rising Edge	2 T_{OSC} − 50		ns
T_{XHQV}	Next Output Data Valid after Clock Rising Edge		2 T_{OSC} + 50	ns
T_{DVXH}	Input Data Setup to Clock Rising Edge	2 T_{OSC} + 200		ns
T_{XHDX}(1)	Input Data Hold after Clock Rising Edge	0		ns
T_{XHQZ}(1)	Last Clock Rising to Output Float		5 T_{OSC}	ns

NOTE:
1. Parameters not tested.

4826175 0144878 173

A TO D CHARACTERISTICS

The A/D converter is ratiometric, so absolute accuracy is dependent on the accuracy and stability of V_{REF}.

10-BIT MODE A/D OPERATING CONDITIONS

Symbol	Description	Min	Max	Units
T_A	Ambient Temperature	0	+70	°C
V_{CC}	Digital Supply Voltage	4.50	5.50	V
V_{REF}	Analog Supply Voltage	4.50	5.50	V(1)
T_{SAM}	Sample Time	1.0		μs(2)
T_{CONV}	Conversion Time	10	15	μs(2)
F_{OSC}	Oscillator Frequency	4.0	16.0	MHz

NOTES:
1. V_{REF} must be within 0.5V of V_{CC}.
2. The value of AD_TIME is selected to meet these specifications.

10-BIT MODE A/D CHARACTERISTICS (Using Above Operating Conditions)(6)

Parameter	Typ*(1)	Min	Max	Units*
Resolution		1024 10	1024 10	Level Bits
Absolute Error		0	±3.0	LSBs
Full Scale Error	0.25 ±0.5			LSBs
Zero Offset Error	0.25 ±0.5			LSBs
Non-Linearity	1.0 ±2.0		±3.0	LSBs
Differential Non-Linearity		−0.75	+0.75	LSBs
Channel-to-Channel Matching	±0.1	0	±1.0	LSBs
Repeatability	±0.25	0		LSBs(1)
Temperature Coefficients: Offset Full Scale Differential Non-Linearity	 0.009 0.009 0.009			 LSB/C(1) LSB/C(1) LSB/C(1)
Off Isolation		−60		dB(1,2,3)
Feedthrough	−60			dB(1,2)
V_{CC} Power Supply Rejection	−60			dB(1,2)
Input Resistance		750	1.2K	Ω(4)
DC Input Leakage	±1.0	0	±3.0	μA
Voltage on Analog Input Pin		ANGND − 0.5	V_{REF} + 0.5	V(5)
Sampling Capacitor	3.0			pF

*An "LSB" as used here has a value of approximately 20 mV.

NOTES:
1. These values are expected for most parts at 25°C, but are not tested or guaranteed.
2. DC to 100 KHz.
3. Multiplexer break-before-make is guaranteed.
4. Resistance from device pin, through internal MUX, to sample capacitor.
5. Applying voltages beyond these specifications will degrade the accuracy of other channels being converted.
6. All conversions performed with processor in IDLE mode.

8-BIT MODE A/D OPERATING CONDITIONS

Symbol	Description	Min	Max	Units
T_A	Ambient Temperature	0	+70	°C
V_{CC}	Digital Supply Voltage	4.50	5.50	V
V_{REF}	Analog Supply Voltage	4.50	5.50	V(1)
T_{SAM}	Sample Time	1.0		μs(2)
T_{CONV}	Conversion Time	7	20	μs(2)
F_{OSC}	Oscillator Frequency	4.0	16.0	MHz

NOTES:
1. V_{REF} must be within 0.5V of V_{CC}.
2. The value of AD_TIME is selected to meet these specifications.

8-BIT MODE A/D CHARACTERISTICS (Using Above Operating Conditions)(6)

Parameter	Typ*(1)	Min	Max	Units*
Resolution		256 8	256 8	Level Bits
Absolute Error		0	±1.0	LSBs
Full Scale Error	±0.5			LSBs
Zero Offset Error	±0.5			LSBs
Non-Linearity		0	±1.0	LSBs
Differential Non-Linearity		−0.5	+0.5	LSBs
Channel-to-Channel Matching		0	±1.0	LSBs
Repeatability	±0.25	0		LSBs(1)
Temperature Coefficients: Offset Full Scale Differential Non-Linearity	 0.003 0.003 0.003			 LSB/C(1) LSB/C(1) LSB/C(1)
Off Isolation		−60		dB(1,2,3)
Feedthrough	−60			dB(1,2)
V_{CC} Power Supply Rejection	−60			dB(1,2)
Input Resistance		750	1.2K	Ω(4)
DC Input Leakage	±1.0	0	±3.0	μA
Voltage on Analog Input Pin		ANGND − 0.5	V_{REF} + 0.5	V(5)
Sampling Capacitor	3.0			pF

*An "LSB" as used here has a value of approximately 20 mV.

NOTES:
1. These values are expected for most parts at 25°C, but are not tested or guaranteed.
2. DC to 100 KHz.
3. Multiplexer break-before-make is guaranteed.
4. Resistance from device pin, through internal MUX, to sample capacitor.
5. Applying voltage beyond these specifications will degrade the accuracy of other channels being converted.
6. All conversions performed with processor in IDLE mode.

4826175 0144880 821

EPROM SPECIFICATIONS

OPERATING CONDITIONS

Symbol	Description	Min	Max	Units
T_A	Ambient Temperature during Programming	20	30	°C
V_{CC}	Supply Voltage during Programming	4.5	5.5	V(1)
V_{REF}	Reference Supply Voltage during Programming	4.5	5.5	V(1)
V_{PP}	Programming Voltage	12.25	12.75	V(2)
V_{EA}	EA Pin Voltage	12.25	12.75	V(2)
F_{OSC}	Oscillator Frequency during Auto and Slave Mode Programming	6.0	8.0	MHz
F_{OSC}	Oscillator Frequency during Run-Time Programming	6.0	16.0	MHz

NOTES:
1. V_{CC} and V_{REF} should nominally be at the same voltage during programming.
2. V_{PP} and V_{EA} must never exceed the maximum specification, or the device may be damaged.
3. V_{SS} and ANGND should nominally be at the same potential (0V).
4. Load capacitance during Auto and Slave Mode programming = 150 pF.

AC EPROM PROGRAMMING CHARACTERISTICS (SLAVE MODE)

Symbol	Parameter	Min	Max	Units
T_{AVLL}	Address Setup Time	0		T_{OSC}
T_{LLAX}	Address Hold Time	100		T_{OSC}
T_{DVPL}	Data Setup Time	0		T_{OSC}
T_{PLDX}	Data Hold Time	400		T_{OSC}
T_{LLLH}	$\overline{PALE}$ Pulse Width	50		T_{OSC}
T_{PLPH}	$\overline{PROG}$ Pulse Width(2)	50		T_{OSC}
T_{LHPL}	$\overline{PALE}$ High to $\overline{PROG}$ Low	220		T_{OSC}
T_{PHLL}	$\overline{PROG}$ High to next $\overline{PALE}$ Low	220		T_{OSC}
T_{PHDX}	Word Dump Hold Time		50	T_{OSC}
T_{PHPL}	$\overline{PROG}$ High to next $\overline{PROG}$ Low	220		T_{OSC}
T_{LHPL}	$\overline{PALE}$ High to $\overline{PROG}$ Low	220		T_{OSC}
T_{PLDV}	$\overline{PROG}$ Low to Word Dump Valid		50	T_{OSC}
T_{SHLL}	$\overline{RESET}$ High to First $\overline{PALE}$ Low	1100		T_{OSC}
T_{PHIL}	$\overline{PROG}$ High to $\overline{AINC}$ Low	0		T_{OSC}
T_{ILIH}	$\overline{AINC}$ Pulse Width	240		T_{OSC}
T_{ILVH}	PVER Hold after $\overline{AINC}$ Low	50		T_{OSC}
T_{ILPL}	$\overline{AINC}$ Low to $\overline{PROG}$ Low	170		T_{OSC}
T_{PHVL}	$\overline{PROG}$ High to $\overline{PVER}$ Valid		220	T_{OSC}

NOTES:
1. Run-time programming is done with Fosc = 6.0 MHz to 10.0 MHz, V_{CC}, V_{PD}, V_{REF} = 5V ±0.5V, T_C = 25°C ±5°C and V_{PP} = 12.5V ±0.25V. For run-time programming over a full operating range, contact factory.
2. Programming specifications are not tested, but guaranteed by design.
3. This specification is for the word dump mode. For programming pulses use Modified Quick Pulse Algorithm.

DC EPROM PROGRAMMING CHARACTERISTICS

Symbol	Parameter	Min	Max	Units
I_{PP}	V_{PP} Programming Supply Current		200	mA

NOTE:
Don not apply V_{PP} until V_{CC} is stable and within specifications and the oscillator/clock has stabilized or the device may be damaged.

EPROM PROGRAMMING WAVEFORMS

SLAVE PROGRAMMING MODE DATA PROGRAM MODE WITH SINGLE PROGRAM PULSE

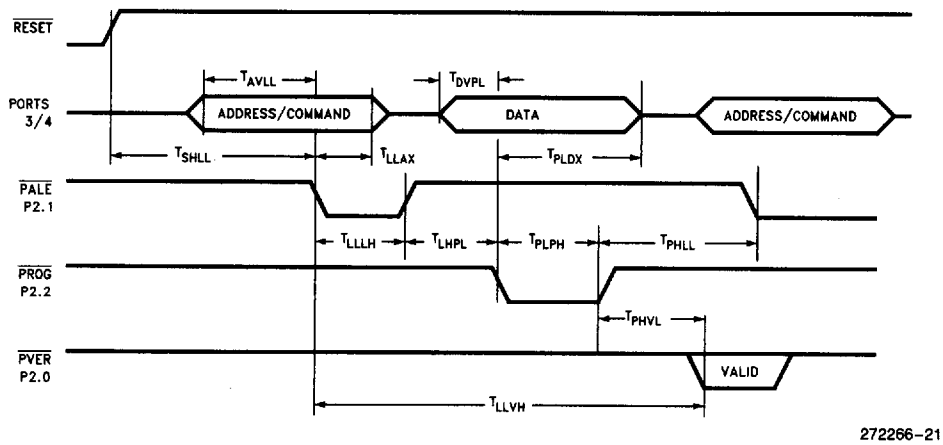

NOTE:
P3.0 must be HIGH ("1")

SLAVE PROGRAMMING MODE IN WORD DUMP MODE WITH AUTO INCREMENT

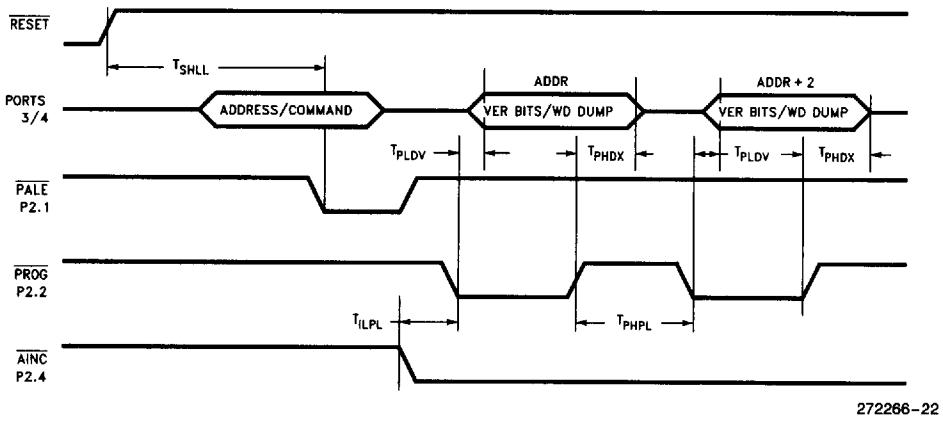

NOTE:
P3.0 must be LOW ("0")

4826175 0144882 6T4

SLAVE PROGRAMMING MODE TIMING IN DATA PROGRAM MODE WITH REPEATED PROG PULSE AND AUTO INCREMENT

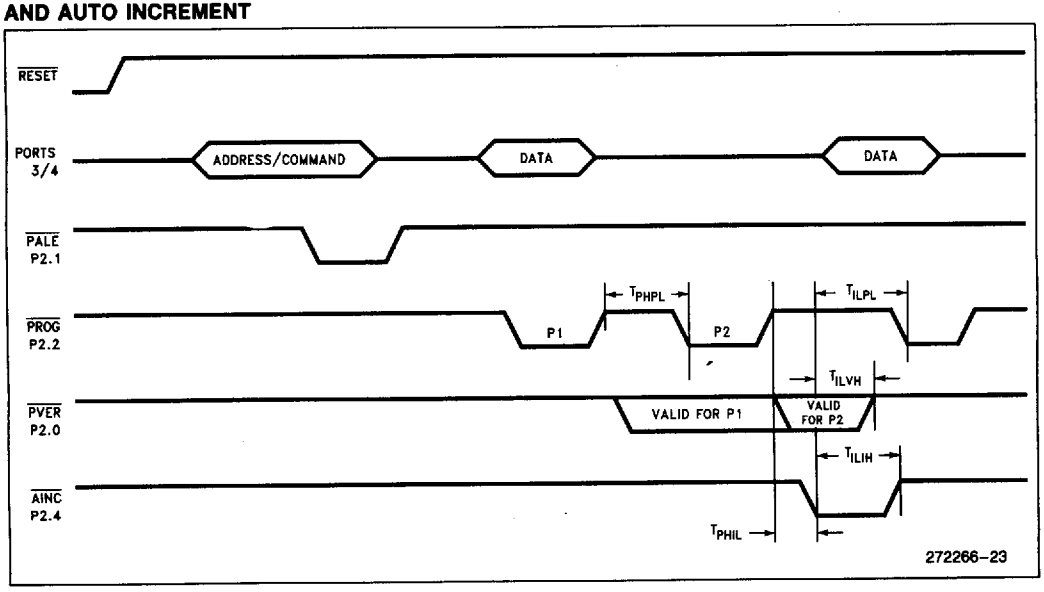

8XC196KT ERRATA

The following is a list of all known functional deviations for 8XC196KT devices. C-step devices can be identified by a special mark following the eight digit FPO number on the top of the package. For C-step devices, this mark is a "C".

1. The following reserved op-codes do not generate the unimplemented op-code interrupt: 1Ch, 1Dh, 1Eh, 1Fh, E3h, E4h, E6h, E8h, E9h, EAh, EBh and F1h.