THIS DRAWING IS UNPUBLISHED. RELEASED FOR PUBLICATION 20
© COPYRIGHT 20 BY TYCO ELECTRONICS CORPORATION. ALL RIGHTS RESERVED.

LOC	DIST
GZ	00

REVISIONS

P	LTR	DESCRIPTION	DATE	DWN	APVD
	C	ECR-09-005727	02APR2009	JS	JH
	D	ECR-09-011630	11JUN2009	JS	DB

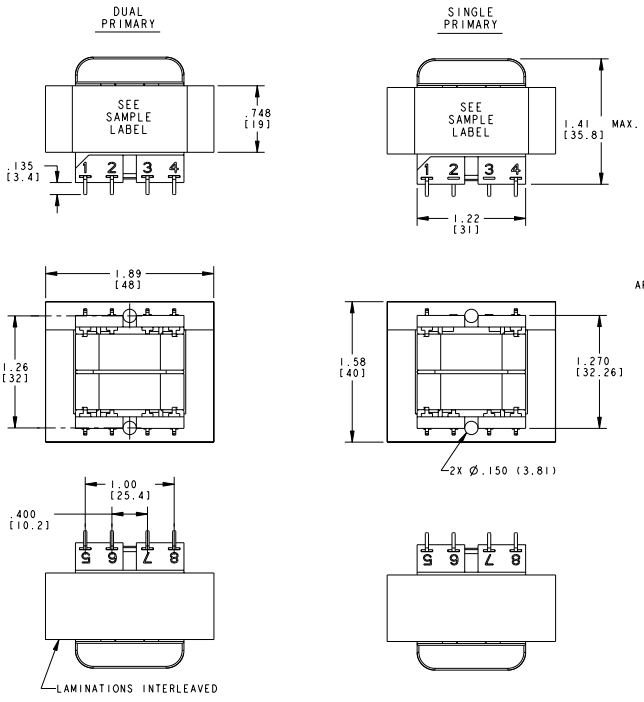

CERTIFICATION: UL/CUL FILE NO. E102980	HZ.	V.A.
DIMENSIONS FOR REFERENCE ONLY.	50/60	12

PRIMARY	SECONDARY		P.U. PART NUMBER	TYCO ELECTRONICS PART NUMBER
	SERIES	PARALLEL		
115 VAC	12 VCT	6 VAC	4900-8012RD63	1672325-2
115 VAC	12.6 VCT	6.3 VAC	4900-8013RD63	1672325-3
115 VAC	24 VCT	12 VAC	4900-8024RD63	1672325-6
115 VAC	28 VCT	14 VAC	4900-8028RD63	1672325-7
115 VAC	48 VCT	24 VAC	4900-8048RD63	1-1672325-0
115/230 VAC	12 VCT	6 VAC	4900-9012RD63	1-1672325-4
115/230 VAC	12.6 VCT	6.3 VAC	4900-9013RD63	1-1672325-5
115/230 VAC	24 VCT	12 VAC	4900-9024RD63	1-1672325-8
115/230 VAC	28 VCT	14 VAC	4900-9028RD63	1-1672325-9
115/230 VAC	48 VCT	24 VAC	4900-9048RD63	2-1672325-2

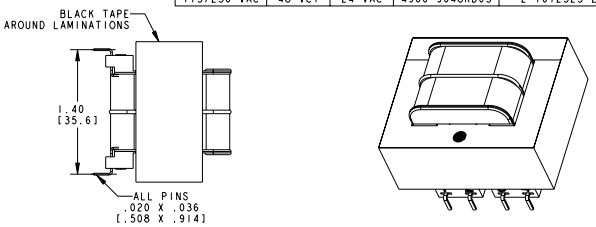

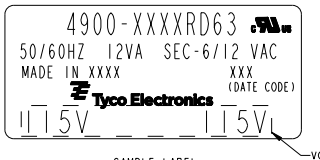

SAMPLE LABEL
SCALE: 5:1

VOLTAGE ON LABEL WILL VARY PER MODEL NUMBER

SCHEMATIC

SCHEMATIC

DWN J.SLIKE 22JUL2008	Tyco Electronics	Tyco Electronics Harrisburg, PA 17105-3608	
CHK J. HURLBURT 22JUL2008		NAME -	
APVD J. HURLBURT 22JUL2008		TRANSFORMER OUTLINE	
PRODUCT SPEC -			
APPLICATION SPEC -		SIZE A2 / CAGE CODE 00779 / DRAWING NO C-4900-RD63	RESTRICTED TO -
WEIGHT -			
CUSTOMER DRAWING		SCALE 5:1 / SHEET 1 OF 1	REV D

DIMENSIONS: INCHES [mm]
TOLERANCES UNLESS OTHERWISE SPECIFIED:
0 PLC ±
1 PLC ±
2 PLC ±0.01
3 PLC ±0.005
4 PLC ±
ANGLES ±1°
FINISH -
MATERIAL -

AMP 1471-9 REV 31MAR2000

Downloaded from Elcodis.com electronic components distributor