DRAWING MADE IN THIRD ANGLE PROJECTION
THIS DRAWING IS UNPUBLISHED. RELEASED FOR PUBLICATION ,19 .
© COPYRIGHT 19 BY AMP INCORPORATED. ALL INTERNATIONAL RIGHTS RESERVED.

LOC	DIST
G	14

REVISIONS			
ZONE	LTR	DESCRIPTION	DATE	APPD
	A	REVISED PER 0720-0230-93	2/25/94	DAP

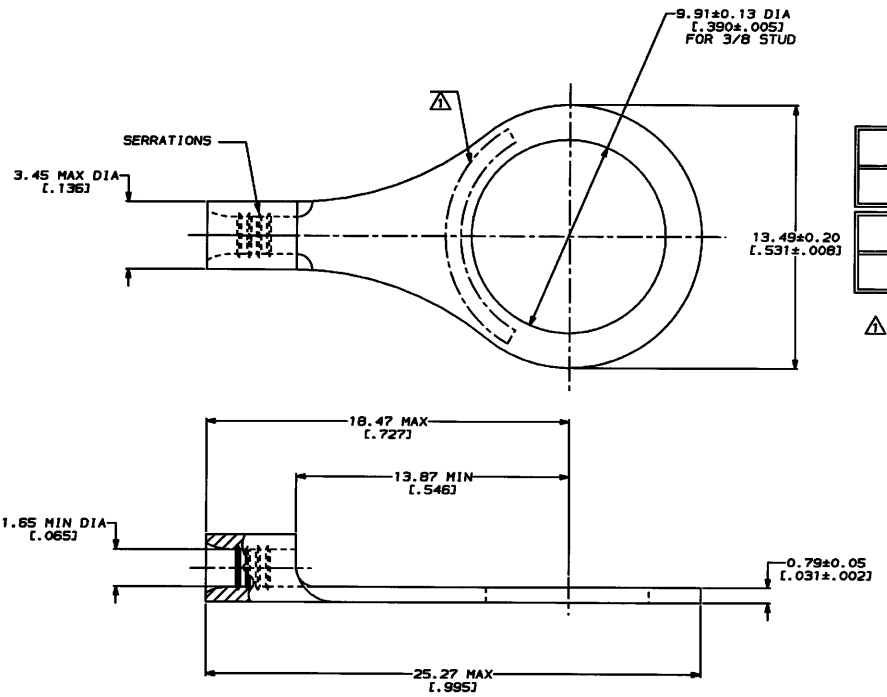

METRIC

DIMENSIONS LISTED IN mm [INCHES]

AMP WIRE RANGE	UL E13288 Listed
22-16 AWG STRANDED	22-16 AWG STRANDED
CSA LR7189 Certified	MILITARY P/N AND CLASS
NOT CERTIFIED	NOT APPLICABLE

⚠1 STAMP AMP 22-18# APPROX AS SHOWN
22-16 TERMINALS ARE STAMPED 22-18 IN
ACCORDANCE WITH MILITARY SPECIFICATION
MIL-T-7928, COMMERCIAL WIRE RANGE IS 22-16

31498

PART NO

AMP INCORPORATED CUSTOMER SERVICE SYSTEMS	
FOR ADDITIONAL PRODUCT INFORMATION OR COPIES OF DRAWINGS AND TECHNICAL DOCUMENTS	PRODUCT INFORMATION CENTER 1-800-522-6752
FOR APPLICATION TOOLING INFORMATION	TOOLING ASSISTANCE CENTER 1-800-722-1111
FOR ORDER ENTRY	1-800-526-5142

MAX RECOMMENDED OPERATING TEMPERATURE: 170°C MAX

VOLTAGE RATING: NOT APPLICABLE

WIRE CROSS SECTIONAL AREA RANGE: 0.26-1.65mm² [509-3,260] CIR MILS STRANDED

DO NOT SCALE PRINT. UNLESS SPECIFIED DIMENSIONS IN mm FINISHES TOLERANCES ON : 2 PLC DEC ± - 3 PLC DEC ± - ANGLES ± -

MATERIAL: COPPER PER ASTM B-152 ANNEALED

FINISH: TIN PLATE 0.00254[.00010] MIN THK PER MIL-T-10727

DR 2-4-93 TA BRINDAW
CHK 2-4-93 DA PATTERSON
APPD 2-4-93 DE MILLER
APPD 2-4-93 JL NECKLEY
PRODUCT SPEC -
APPLICATION SPEC -
WEIGHT -

AMP Incorporated Harrisburg, PA 17105-3608

NAME: TERMINAL, RING TONGUE, BUDGET

SIZE	CAGE CODE	DRAWING NO
C	00779	C-31498
SCALE 8:1		SHEET 1 OF 1

CUSTOMER DRAWING

25-FEB-94 11:19:18 ama2463 /Files/dwg1123/dwg1123/u-bodies/u-22-16

Downloaded from Elcodis.com electronic components distributor