THIS DRAWING IS UNPUBLISHED. RELEASED FOR PUBLICATION -,- .
© COPYRIGHT - By - ALL RIGHTS RESERVED.

LOC	DIST
G	14

REVISIONS

P	LTR	DESCRIPTION	DATE	DWN	APVD
	T4	REVISED PER ECO-11-018801	04JAN12	KH	DR

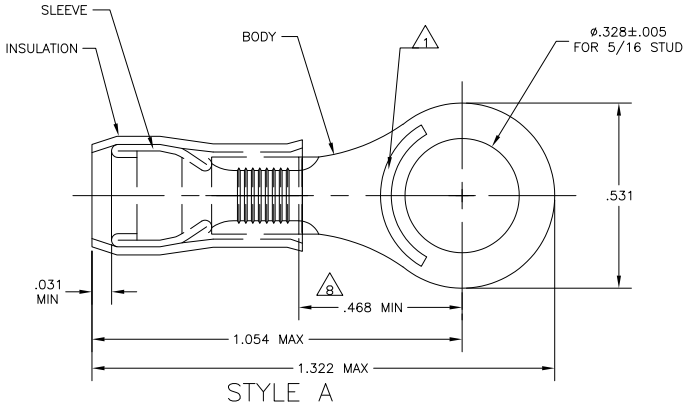

STYLE A

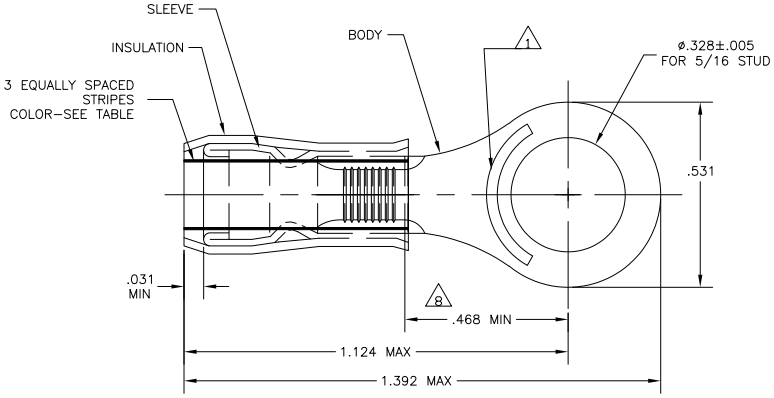

STYLE B
INSULATION RESTRICTING

1. STAMP "AMP – SEE TABLE" APPROX AS SHOWN
2. WIRE INSULATION DIA: SEE TABLE
3. TONGUE MATERIAL THK: .040±.002
4. BODY: TIN PLATE .000100 MIN EXT THK PER ASTM B545
5. SLEEVE: TIN PLATE .000100 MIN EXT THK PER ASTM B545
6. SLEEVE: NICKEL PLATE PER QQ-N-290
7. BODY & SLEEVE- CU PER ASTM B152
   INSULATION – NYLON PER ASTM D4066
   COLOR – YELLOW
8. APPLIES FROM EDGE OF METAL WIRE BARREL TO CENTER OF STUD HOLE.
9. MEETS MS25036-113, CLASS 1 & 2
10. MEETS MS25036-113, CLASS 2
11. MEETS M7928/1-60, CLASS 1 & 2
12. MEETS M7928/1-67, CLASS 1 & 2

QTY	PACKAGE TYPE	STAMPING	WIRE INSUL DIA	WIRE SIZE	STRIPE COLOR	STYLE	FINISH BODY	FINISH SLEEVE	PART NO
50	LOOSE PIECE, BOX	12-10	.150-.230	12-10	--	A	4	6	8-320576-2
~~500~~	~~LOOSE PIECE LG BOX~~	~~12-10~~	~~.150-.230~~	~~12-10~~	~~--~~	~~A~~		~~5~~	~~2-320576-6~~
~~2500~~	~~ON TAPE & REEL~~	~~10~~	~~.119-.200~~	~~10~~	~~BROWN~~	~~B~~		~~6~~	~~2-320576-5~~
~~2500~~	~~ON TAPE & REEL~~	~~12~~	~~.095-.200~~	~~12~~	~~YELLOW~~	~~B~~		~~6~~	~~2-320576-4~~
---	LOOSE PIECE	10	.119-.200	10	BROWN	B		6	12 2-320576-3
---	LOOSE PIECE	12	.095-.200	12	YELLOW	B		6	11 2-320576-2
2500	ON TAPE & REEL	12-10	.150-.230	12-10	--	A		5	10 2-320576-1
---	LOOSE PIECE	12-10	.150-.230	12-10	--	A		5	9 320576

CUSTOMER SERVICE SYSTEMS

FOR ADDITIONAL PRODUCT INFORMATION OR COPIES OF DRAWINGS AND TECHNICAL DOCUMENTS	PRODUCT INFORMATION CENTER 1-800-522-6752
FOR APPLICATION TOOLING INFORMATION	TOOLING ASSISTANCE CENTER 1-800-722-1111
FOR ORDER ENTRY	1-800-526-5142

THIS DRAWING IS A CONTROLLED DOCUMENT FOR AMP INCORPORATED. IT IS SUBJECT TO CHANGE AND THE CONTROLLING ENGINEERING ORGANIZATION SHOULD BE CONTACTED FOR THE LATEST REVISION.

MAX RECOMMENDED OPERATING TEMPERATURE: 105°C MAX
VOLTAGE RATING: 300 VOLT MAX
CIRCULAR MIL AREA: 2.62-6.64mm² [5,180-13,100] STRANDED OR SOLID

THIS DRAWING IS A CONTROLLED DOCUMENT.

DIMENSIONS: INCHES

TOLERANCES UNLESS OTHERWISE SPECIFIED:

0 PLC	± -
1 PLC	± -
2 PLC	± -
3 PLC	± .008
4 PLC	± -
ANGLES	± -

MATERIAL - 7
FINISH -

DWN	JR RUTH 23DEC09
CHK	T MICHIELUTTI 23DEC09
APVD	T MICHIELUTTI 23DEC09
PRODUCT SPEC	—
APPLICATION SPEC	—
WEIGHT	—

TE Connectivity

NAME: TERMINAL, RING TONGUE, PIDG
WIRE SIZE: 12-10 AWG

SIZE	CAGE CODE	DRAWING NO	RESTRICTED TO
A2	00779	C-320576	—

CUSTOMER DRAWING | SCALE 5:1 | SHEET 1 OF 1 | REV T4

320576

1471-9 (3/11)

Downloaded from Elcodis.com electronic components distributor