NUMBER C154672

3rd ANGLE (AMERICAN) PROJECTION

DIMENSIONS IN INCHES. DO NOT SCALE PRINT
DIMENSIONS THUS [ ] IN MM.

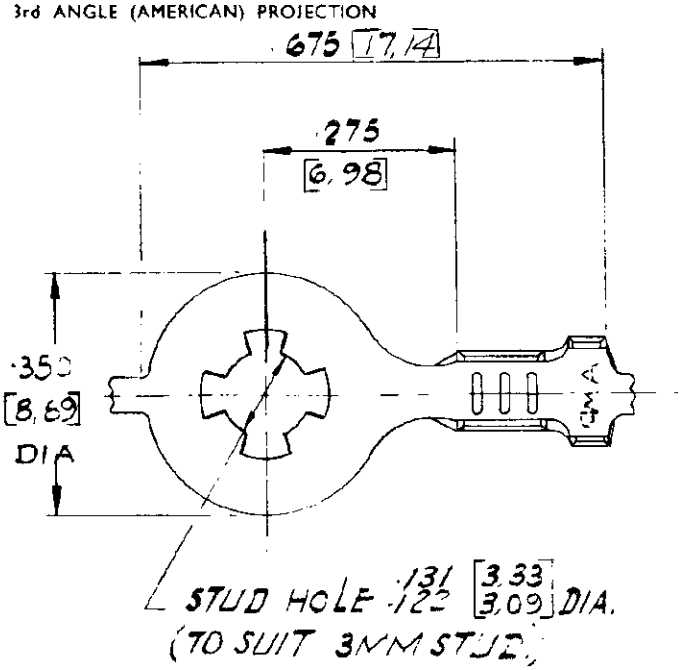

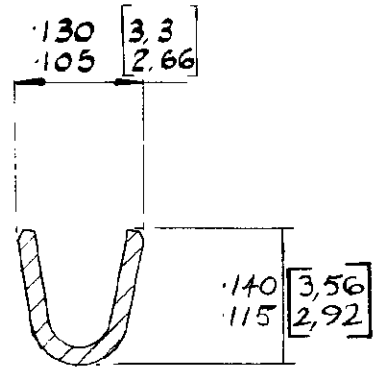

SECTION X-X
SCALE 6:1

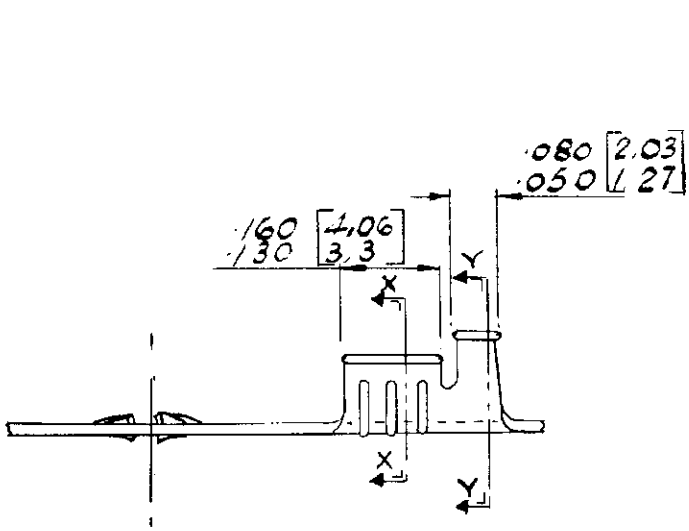

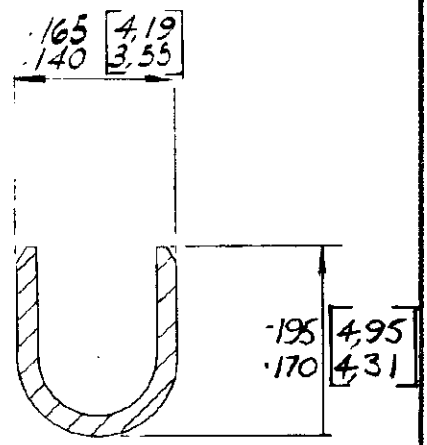

SECTION Y-Y
SCALE 6:1

PART Nº	MATERIAL	FINISH
154672-3	STEEL	NICKEL
154672-2	STEEL	ELECTRO-TIN
154672-1	STEEL	NONE

NOTE:-
INSULATION RANGE ·120 ·100 [3,05 2,54] DIA.

LTR	REVISION RECORD	DR	CHK	DATE
0	RELEASED FOR PRODUCTION	PS		19/12/74

PRINT DIST.

DR C.E.SLOUGH 10.6.74
CHK PSMITH 10.6.74
DE
APP 13/6/74

© AMP of GREAT BRITAIN LTD 1974

CUSTOMER COPY REFERENCE ONLY

MATERIAL AND FINISH
·018 [0,46] THICK
SEE TABLE

WIRE — RANGE — INSULATION
20-16 SEE NOTE

TOLERANCE EXCEPT AS NOTED ± ·015 [0,38] ± 1° 0'

SCALE 4:1

AMP of Great Britain Ltd
TERMINAL HOUSE, STANMORE, MIDDX.

CLASS

TYPE

LOC F A

NO C154672

REV

NAME SHAKE PROOF RING TONGUE

[PART Nº WAS CP74-13443]

GAF 9245/70

Downloaded from Elcodis.com electronic components distributor