THIS DRAWING IS UNPUBLISHED. RELEASED FOR PUBLICATION .19 .
© COPYRIGHT 19 BY AMP INCORPORATED. ALL RIGHTS RESERVED.

LOC	DIST
AF	50

REVISIONS

P	LTR	DESCRIPTION	DATE	DWN	APVD
	B	REVISED PER OG3A-0171-02	11APR02	MF	KR

1 CONTINUOUS STRIP ON REELS WITH TERMINALS LOCATED ON 5.08±0.08 [.200±.003] CENTERS.

2 SLOT ACCEPTS 0.36-0.45mm [#27-#25] AWG COPPER MAGNET WIRE

3 IDENTIFICATION NUMBER 9 FOR WIRE SLOT SIZE.

4 0.002032 [.000080] MIN TIN PLATE OVER 0.00254 [.000100] MIN COPPER UNDERPLATE.

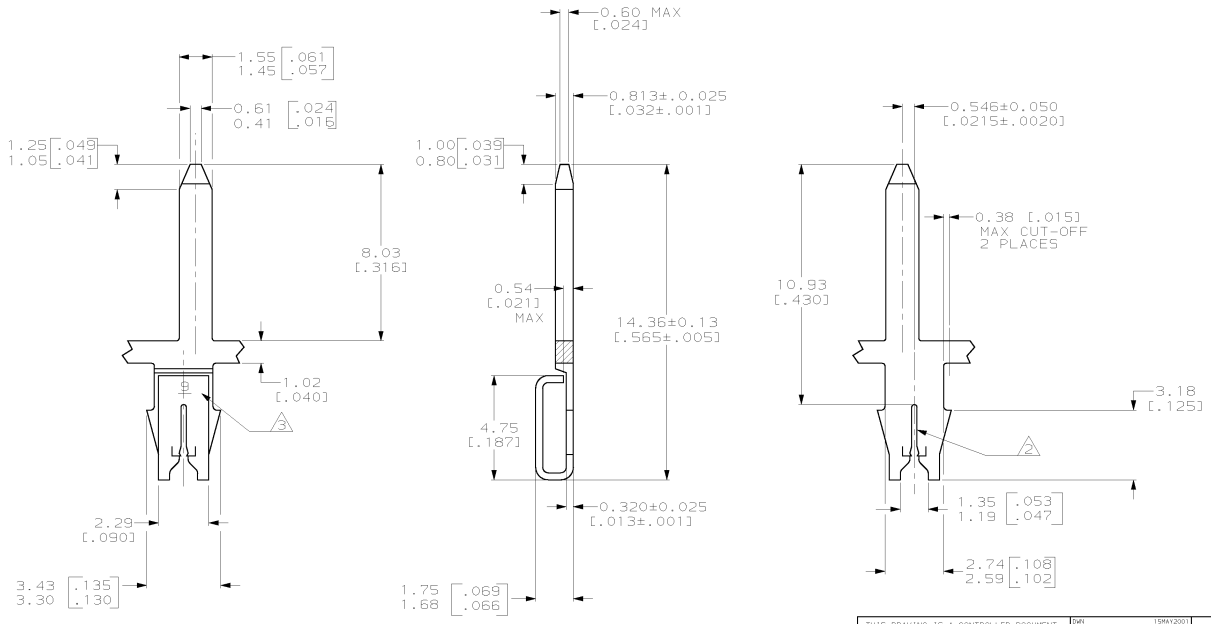

1217641-1

PART NUMBER

THIS DRAWING IS A CONTROLLED DOCUMENT.

DIMENSIONS: mm [INCHES]

TOLERANCES UNLESS OTHERWISE SPECIFIED:
0 PLC ±-
1 PLC ±-
2 PLC ±0.25[.010]
3 PLC ±-
4 PLC ±-
ANGLES ±-
FINISH 4 -

MATERIAL: H04 PRE-MILLED BRASS

DWN 15MAY2001 MICHAEL S. FEHER
CHK 15MAY2001 KURT A. RANDOLPH
APVD 15MAY2001 KURT A. RANDOLPH

PRODUCT SPEC 108-2012
APPLICATION SPEC 114-2069
WEIGHT -

CUSTOMER DRAWING

AMP Incorporated
Harrisburg, PA 17105-3608

NAME: TAB, 1.50[.059] SERIES, RIGHT HAND, 187 SERIES MAG-MATE™

SIZE	CAGE CODE	DRAWING NO	RESTRICTED TO
A2	00779	C- 1217641	-

SCALE	SHEET	OF	REV
8:1	1	1	B

AMP 1471-9 REV 11JUN97

10-APR-02 08:57:59 amp02644 /home/amp02644/dmtecmod

Downloaded from Elcodis.com electronic components distributor