THIS DRAWING IS UNPUBLISHED. RELEASED FOR PUBLICATION .19 .
© COPYRIGHT 19 BY AMP INCORPORATED. ALL RIGHTS RESERVED.

LOC	DIST
AF	50

REVISIONS

P	LTR	DESCRIPTION	DATE	DWN	APVD
	A	REVISED PER OG1A-0069-98	26MAR98	MF	KR

1 CONTINUOUS STRIP ON REELS (NO SPLICES) WITH TERMINALS LOCATED ON 5.08±0.08 [.200±.003] CENTERS.

2 SLOT ACCEPTS 0.46-0.64mm [#25-#22] AWG COPPER MAGNET WIRE

3 IDENTIFICATION NUMBER 13 FOR WIRE SLOT SIZE.

4 0.00203[.000080] MIN TIN PER MIL-T-10727 OVER 0.00254[.000100] MIN COPPER UNDERPLATE PER MIL-C-14550

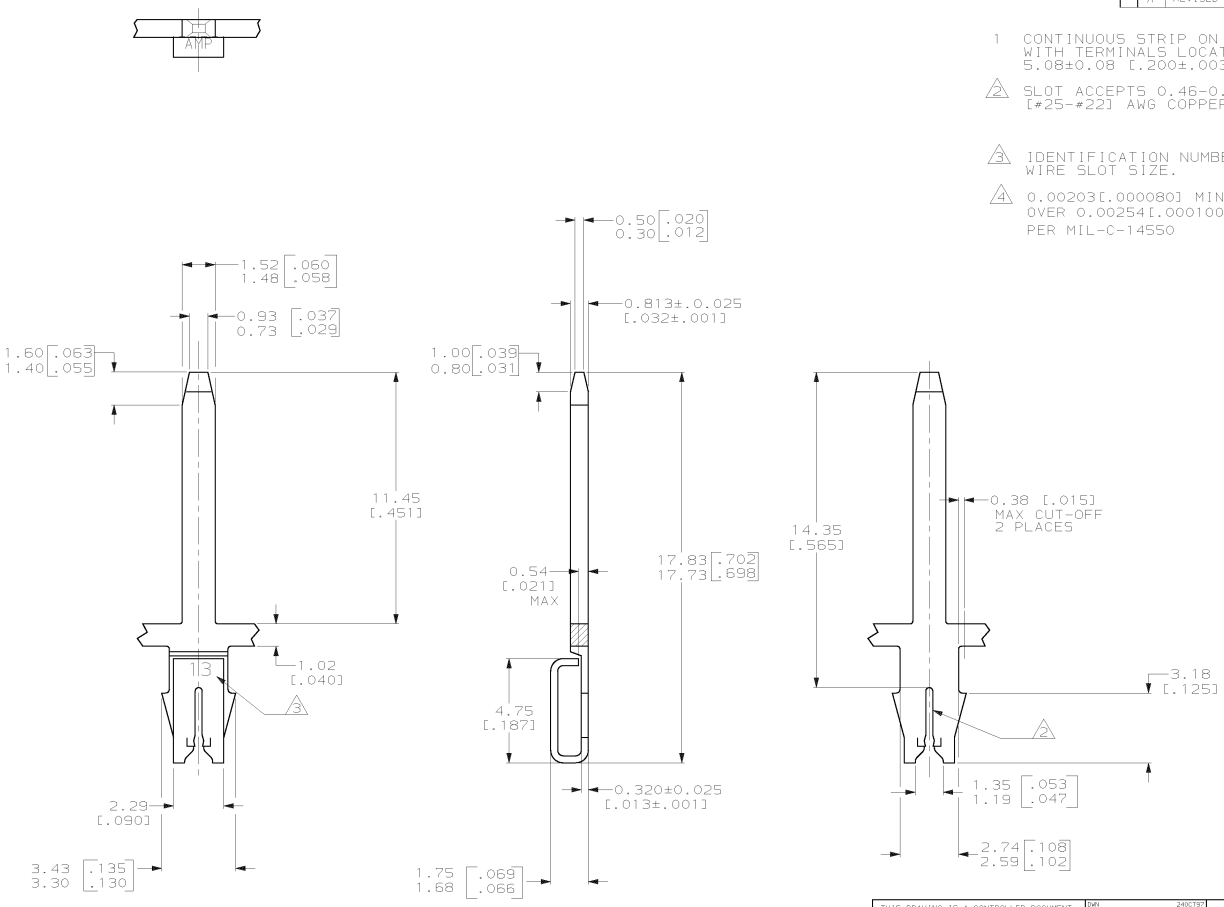

1217013

1217013-1

PART NUMBER

PROPOSED DESIGN

NOT RELEASED FOR PRODUCTION

THIS DRAWING IS A CONTROLLED DOCUMENT.

DIMENSIONS: mm [INCHES]

TOLERANCES UNLESS OTHERWISE SPECIFIED:

0 PLC	±-
1 PLC	±-
2 PLC	±0.25[.010]
3 PLC	±-
4 PLC	±-
ANGLES	±-

FINISH 4

MATERIAL: H04 PRE-MILLED BRASS

DWN 240CT97 MICHAEL S. FEHER
CHK 27OCT97 JEFF R. RUTH
APVD 28OCT97 KURT A. RANDOLPH

PRODUCT SPEC 108-2012

APPLICATION SPEC 114-2069

WEIGHT –

CUSTOMER DRAWING

AMP Incorporated
Harrisburg, PA 17105-3608

NAME: TAB, 1.50[.059] SERIES, MAG-MATE™

SIZE	CAGE CODE	DRAWING NO	RESTRICTED TO
A2	00779	C-1217013	–

SCALE	SHEET	OF	REV
8:1	1	1	A

AMP 1471-9 REV 27JUN96

26-MAR-98 08:10:35 amp02644 /ws/dept2127/dwg2127/u.mag-mate/u.187

Downloaded from Elcodis.com electronic components distributor