DRAWING MADE IN THIRD ANGLE PROJECTION

THIS DRAWING IS UNPUBLISHED. RELEASED FOR PUBLICATION ,19 .

© COPYRIGHT 19 BY AMP INCORPORATED. ALL INTERNATIONAL RIGHTS RESERVED.

LOC	DIST	P	F
AF	50		

REVISIONS

ZONE	LTR	DESCRIPTION	DATE	APPD
	A	REL -1 PER 0710-0367-95	28AUG95	MF/NN

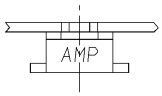

1 CONTINUOUS STRIP ON REELS WITH TERMINALS LOCATED ON 5.08±0.08 [.200±.003] CENTERS.

2 SLOT ACCEPTS 0.25-0.32mm [#30-#28] AWG COPPER MAGNET WIRE 2 WIRES MAX OF THE SAME SIZE PER SLOT.

3 IDENTIFICATION NUMBER 6 FOR WIRE SLOT SIZE.

4 0.00203 [.000080] - 0.00381 [.000150] TIN PER MIL-T-10727 OVER 0.00254 [.000100] -0.00508 [.000200] COPPER UNDERPLATE PER MIL-C-14550.

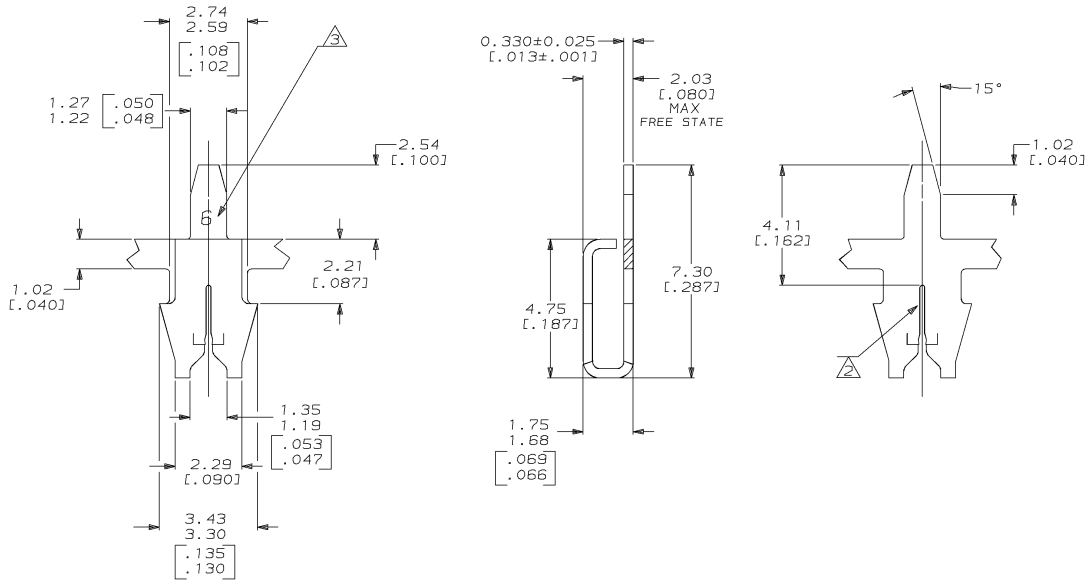

63818

	63818-1
	PART NO

DO NOT SCALE PRINT.
UNLESS SPECIFIED
DIMENSIONS IN mm [INCHES]
TOLERANCES ON ,
2 PLC DEC ± 0.13 [.005]
3 PLC DEC ± -
ANGLES ± 1°

MATERIAL: H04 BRASS

FINISH: 4

DR 29/OCT/94 MICHAEL S. FEHER
CHK 31/OCT/94 JEFF R. RUTH
APPD 31/OCT/94 NELSON E. NEFF
APPD 31/OCT/94 TERRY L. SHUTTER
PRODUCT SPEC 108-2012
APPLICATION SPEC 114-2069
WEIGHT _

AMP Incorporated
Harrisburg, PA 17105-3608

NAME: TERMINAL, POSTED, MAG-MATE™

SIZE C | CAGE CODE 00779 | DRAWING NO C-63818
SCALE 10:1 | SHEET 1 OF 1

THIS DRAWING IS A CONTROLLED DOCUMENT FOR AMP INCORPORATED. IT IS SUBJECT TO CHANGE AND THE CONTROLLING ENGINEERING ORGANIZATION SHOULD BE CONTACTED FOR THE LATEST REVISION.

AMP 1471-6 REV 3-92

CUSTOMER DRAWING

28-AUG-95 07:58:29 amp02644 /ws/dept2127/dwg2127/u.mag-mate/u.187

Downloaded from Elcodis.com electronic components distributor