DRAWING MADE IN THIRD ANGLE PROJECTION

THIS DRAWING IS UNPUBLISHED. RELEASED FOR PUBLICATION ,19 .

© COPYRIGHT 19 BY AMP INCORPORATED. ALL INTERNATIONAL RIGHTS RESERVED.

LOC	DIST
AF	50

REVISIONS

ZONE	LTR	DESCRIPTION	DATE	APPD
	C	REV PER 0710-0522-95	11/DEC/95	RG/NN

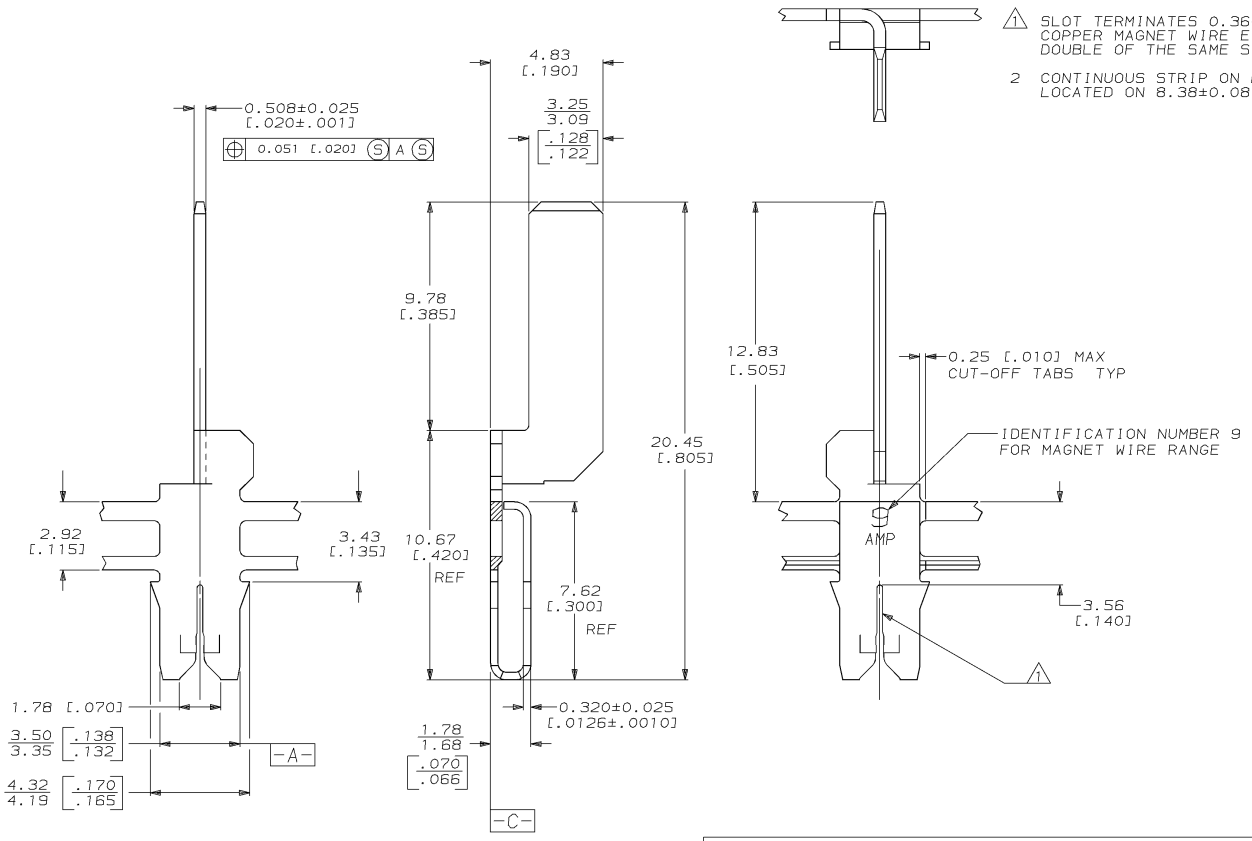

1 SLOT TERMINATES 0.36-0.50mm [#27-#24] AWG COPPER MAGNET WIRE EITHER SINGLE OR DOUBLE OF THE SAME SIZE.

2 CONTINUOUS STRIP ON REELS WITH TERMINALS LOCATED ON 8.38±0.08 [.330±.003] CENTERS.

63808

63808-1

PART NO

DO NOT SCALE PRINT.
UNLESS SPECIFIED
DIMENSIONS IN mm [INCHES]
TOLERANCES ON ,
2 PLC DEC ± 0.25 [.010]
3 PLC DEC ± -
ANGLES ± -

MATERIAL
#4M PRE-MILLED BRASS

FINISH
0.002032 [.000080]
MIN TIN PER
MIL-T-10727

DR 19/SEP/94 MICHAEL S. FEHER
CHK 21/SEP/94 JEFF R. RUTH
APPD 21/SEP/94 NELSON E. NEFF
APPD 21/SEP/94 TERRY L. SHUTTER
PRODUCT SPEC 108-2012
APPLICATION SPEC 114-2046
WEIGHT _

AMP Incorporated
Harrisburg, PA 17105-3608

NAME
TERMINAL, TAB,
3.18 [.125], MAG-MATE™

SIZE C | CAGE CODE 00779 | DRAWING NO C-63808
SCALE 8:1 | SHEET 1 OF 1

THIS DRAWING IS A CONTROLLED DOCUMENT FOR AMP INCORPORATED. IT IS SUBJECT TO CHANGE AND THE CONTROLLING ENGINEERING ORGANIZATION SHOULD BE CONTACTED FOR THE LATEST REVISION.

AMP 1471-6 REV 3-92

CUSTOMER DRAWING

11-DEC-95 08:46:08 amp21428 /ws/dept2127/dwg2127/u.mag-mate/u.300

Downloaded from Elcodis.com electronic components distributor