THIS DRAWING IS UNPUBLISHED. RELEASED FOR PUBLICATION .19 .
© COPYRIGHT 19 BY AMP INCORPORATED. ALL RIGHTS RESERVED.

LOC	DIST
G	86

REVISIONS

P	LTR	DESCRIPTION	DATE	DWN	APVD
	G	REVISED PER OL20-0217-97	24NOV97	DKS	MJS

1 2.41[.095] MAX ALUMINUM FOIL THK

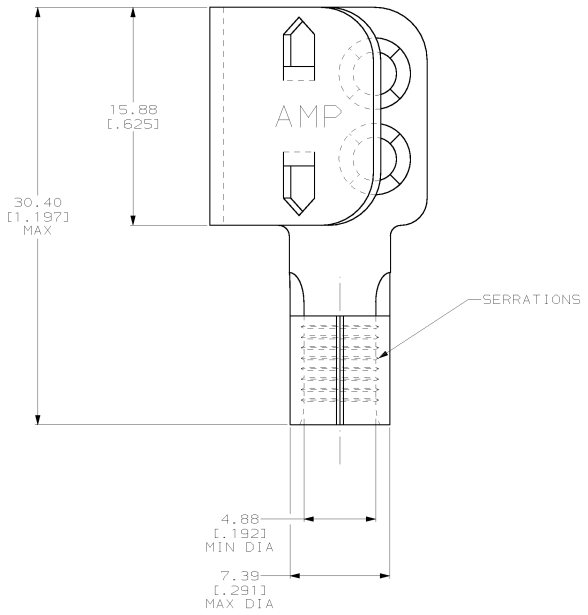

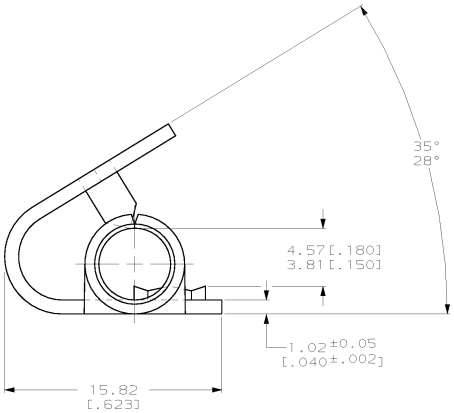

53660

OBSOLETE	BRASS PER QQ-C-50	53660-4
	~~STEEL PER QQ-S-698~~	~~53660-2~~
	MATERIAL	AMP PART NUMBER

AMP INCORPORATED
CUSTOMER SERVICE SYSTEMS

FOR ADDITIONAL PRODUCT INFORMATION OR COPIES OF DRAWINGS AND TECHNICAL DOCUMENTS	PRODUCT INFORMATION CENTER 1-800-522-6752
FOR APPLICATION TOOLING INFORMATION	TOOLING ASSISTANCE CENTER 1-800-722-1111
FOR ORDER ENTRY	1-800-526-5142

RECOMMENDED OPERATING TEMPERATURE: 150°C MAX

VOLTAGE RATING: NOT APPLICABLE

WIRE CROSS SECTIONAL AREA RANGE: 6.64-10.50mm² [13.100-20.800] CIR MILS SOLID OR STRANDED

THIS DRAWING IS A CONTROLLED DOCUMENT.

DIMENSIONS: mm [INCHES]

TOLERANCES UNLESS OTHERWISE SPECIFIED:
0 PLC ±-
1 PLC ±-
2 PLC ±0.20[.008]
3 PLC ±-
4 PLC ±-
ANGLES ±-

MATERIAL: SEE TABLE

FINISH: TIN PLATE 0.00254[.00010] MIN THK PER ASTM B-545

DWN DK SCHRUM 25NOV97
CHK MJ SPICER 03DEC97
APVD JH MECKLEY 03DEC97
PRODUCT SPEC —
APPLICATION SPEC —
WEIGHT —

AMP Incorporated
Harrisburg, PA 17105-3608

NAME W/ BARREL, TAP SPLICE, TERMI-FOIL™, WIRE SIZE: 8 AWG

SIZE	CAGE CODE	DRAWING NO	RESTRICTED TO
A2	00779	C- 53660	—

CUSTOMER DRAWING | SCALE 5:1 | SHEET 1 OF 1 | REV G

AMP 1471-9 REV 11JUN97

24-NOV-97 16:28:38 amp26463 /ws/dept1123/dwg1123/u.termi-foil/u.tap_splice

Downloaded from Elcodis.com electronic components distributor