THIS DRAWING IS UNPUBLISHED. RELEASED FOR PUBLICATION 20
© COPYRIGHT 20 BY TYCO ELECTRONICS CORPORATION. ALL RIGHTS RESERVED.

| LOC | DIST |
|---|---|
| FT | 0 |

REVISIONS

| P | LTR | DESCRIPTION | DATE | DRN | APVD |
|---|---|---|---|---|---|
| | B1 | REVISED PER ECO-10-009455 | 06MAR2010 | HMR | CR |

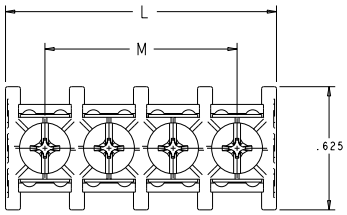


1. ELECTRICAL RATINGS: 300V, 20A
   WIRE RANGE: 12-22 AWG
   RECOMMENDED TIGHTENING TORQUE: 10 IN LBS
   OPERATING TEMPERATURE: 105° MAX

2 TYCO ELECTRONICS LOGO LOCATED IN APPROXIMATE AREA SHOWN

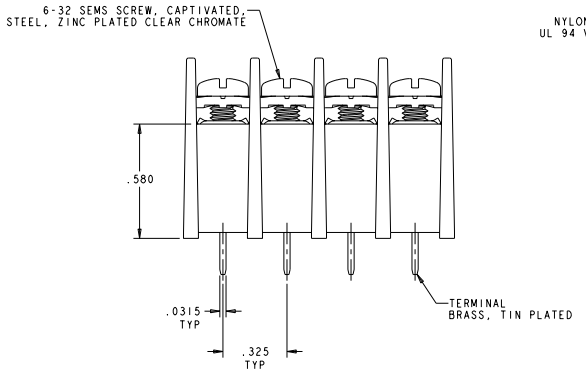


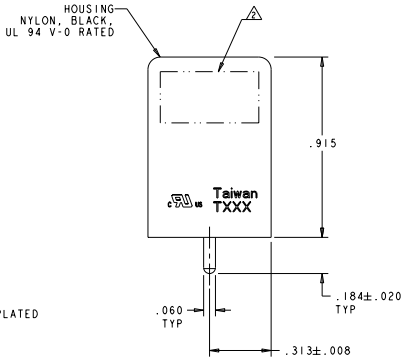


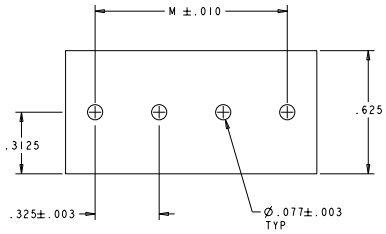


RECOMMENDED PC BOARD LAYOUT

| M | L | NO OF POSN | PART NUMBER |
|---|---|---|---|
| 4.875 | 5.275 | 16 | 1-1546734-6 |
| 4.550 | 4.950 | 15 | 1-1546734-5 |
| 4.225 | 4.625 | 14 | 1-1546734-4 |
| 3.900 | 4.300 | 13 | 1-1546734-3 |
| 3.575 | 3.975 | 12 | 1-1546734-2 |
| 3.250 | 3.650 | 11 | 1-1546734-1 |
| 2.925 | 3.325 | 10 | 1-1546734-0 |
| 2.600 | 3.000 | 9 | 1546734-9 |
| 2.275 | 2.675 | 8 | 1546734-8 |
| 1.950 | 2.350 | 7 | 1546734-7 |
| 1.625 | 2.025 | 6 | 1546734-6 |
| 1.300 | 1.700 | 5 | 1546734-5 |
| .975 | 1.375 | 4 | 1546734-4 |
| .650 | 1.050 | 3 | 1546734-3 |
| .325 | .725 | 2 | 1546734-2 |

THIS DRAWING IS A CONVERTED AMP DRAWING AND MAY CONTAIN DIMENSIONS NOT IN COMPLIANCE WITH STANDARD TYCO ELECTRONICS DRAWING PRACTICE.

DIMENSIONS: INCHES

TOLERANCES UNLESS OTHERWISE SPECIFIED:
0 PLC ±:
1 PLC ±0.1
2 PLC ±0.02
3 PLC ±0.005
4 PLC ±0.0005
ANGLES ±:

MATERIAL :
FINISH :

DRN S. WELDON 11SEP2003
CHK S. YODER 11SEP2003
APVD S. YODER 11SEP2003

Tyco Electronics
Harrisburg, PA 17105-3608

NAME DUAL BARRIER STRIP ASSEMBLY, .325 PITCH, PCB MOUNT, HIGH RISE

PRODUCT SPEC -
APPLICATION SPEC -
WEIGHT -

SIZE A1 | CAGE CODE 00779 | DRAWING NO C-1546734 | RESTRICTED TO -

CUSTOMER DRAWING | SCALE 4:1 | SHEET 1 OF 1 | REV B1

AMP 4805 REV 31MAR2000
Pro/ENGINEER DRAWING

Downloaded from Elcodis.com electronic components distributor