THIS DRAWING IS UNPUBLISHED. RELEASED FOR PUBLICATION: - -
© COPYRIGHT - BY TYCO ELECTRONICS CORPORATION. ALL RIGHTS RESERVED.

LOC	DGT
AD	0

REVISIONS

Y	LTR	DESCRIPTION	DATE	DRN	APVD
	Y	REV PER 0G3C-0198-99	22AUG00	BH	HW

1. RECEPTACLE ACCEPTS A .008-.014 THICK I.C. LEAD.
2. TUBE LOADED FOR AUTOMATIC INSERTION.
3. TWO .000030 MIN THK. GOLD STRIPES IN CONTACT AREA WITH TIN-LEAD (93/7) ON CONTACT LEGS, BALANCE OF CONTACT NICKEL PLATED.
4. TWO .000015 MIN THK. GOLD STRIPES IN CONTACT AREA WITH TIN-LEAD (93/7) ON CONTACT LEGS, BALANCE OF CONTACT NICKEL PLATED.
5. MAXIMUM DIMENSION FOR I.C. SEATING PLANE.

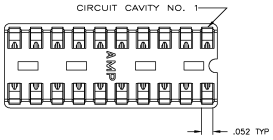

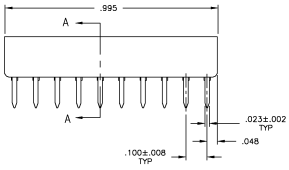

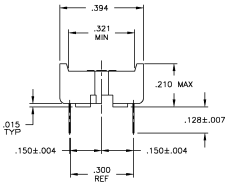

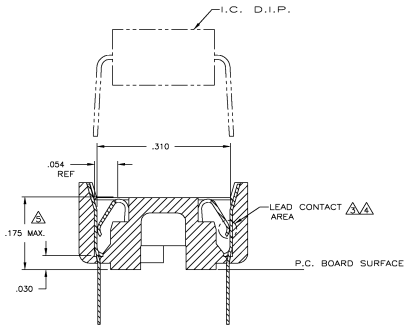

SECTION A-A
SCALE 10:1

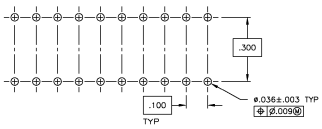

RECOMMENDED MOUNTING HOLE PATTERN
SCALE 4:1

	3	PHOS.BRZ. .005 THK	GLASS-FILLED THERMOPLASTIC, 94V-0, BLACK	2-640464-4
SUPSD BY 390261-6	TINNED	PHOS.BRZ. .005 THK	GLASS-FILLED THERMOPLASTIC, 94V-0, BLACK	2-640464-3
	3	BE.CU. .005 THK	GLASS-FILLED THERMOPLASTIC, 94V-0, BLACK	2-640464-2
SUPSD BY 390261-6	TINNED	BE.CU. .005 THK	GLASS-FILLED THERMOPLASTIC, 94V-0, BLACK	2-640464-1
	CONTACT FINISH	CONTACT MAT'L	HOUSING MATERIAL	PART NO.

THIS DRAWING IS A CONTROLLED DOCUMENT.

DIMENSIONS: INCHES

TOLERANCE UNLESS OTHERWISE SPECIFIED: 0 PLC ± -- ; 1 PLC ± -- ; 2 PLC ± .005 ; 3 PLC ± -- ; ANGLES ± 2° -

MATERIAL: SEE TABLE

FINISH: SEE TABLE

DWN M.CITRIS 2-20-97
CHK R.MILLER 2-20-97
APVD J.LAMBERT 2-20-97

PRODUCT SPEC 108-1066
APPLICATION SPEC 114-1049
WEIGHT --

CUSTOMER DRAWING

Tyco Electronics Corporation
Harrisburg, PA 17105

NAME: SOCKET ASSY, DIP, 20 POS, DIPLOMATE DL

SIZE A1 | CAGE CODE 00779 | DRAWING NO C-640464 | RESTRICTED TO --

SCALE 4:1 | SHEET 1 OF 1 | REV Y

AMP 4805 REV 310402000

22AUG00 _210pm _AMP33743

Downloaded from Elcodis.com electronic components distributor