THIS DRAWING IS UNPUBLISHED. RELEASED FOR PUBLICATION -.-.-
© COPYRIGHT - BY TYCO ELECTRONICS CORPORATION. ALL RIGHTS RESERVED.

LOC	DIST
DF	XO

REVISIONS

P	LTR	DESCRIPTION	DATE	DRN	APVD
	C	REV PER ECO-08-032085	13JAN2009	PK	RG

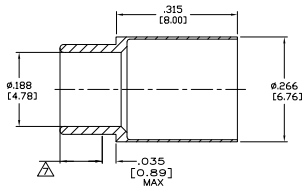

1 4
FERRULE

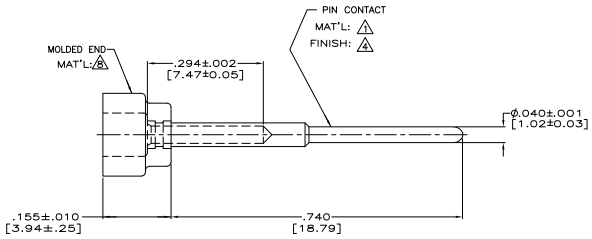

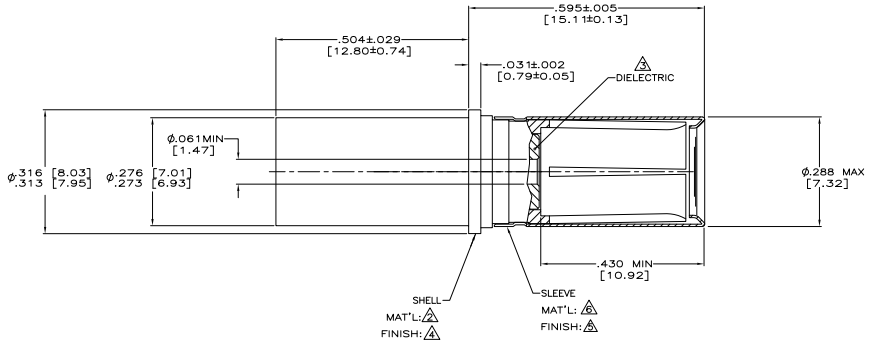

ASSEMBLY PROCEDURE

1. STRIP OUTER INSULATION BACK FROM END OF CABLE 1.00 INCH.
2. SLIGHTLY FLARE THE SHIELD AND TRIM APPROXIMATELY .25" OF THE DIELECTRIC, CENTER CONDUCTOR AND FILLER.
3. SLIDE INNER CRIMP FERRULE, LARGEST END FIRST, OVER THE SHIELD UNTIL IT BOTTOMS ON THE OUTER INSULATION.
4. COMB OUT SHIELD. FOLD SHIELD BACK OVER THE INNER CRIMP FERRULE. TRIM THE SHIELD EVEN WITH THE BACK EDGE OF THE KNURLED AREA.
5. TRIM THE DIELECTRIC .10 INCH FROM THE SHIELD
6. TRIM THE FILLER FLUSH WITH THE END OF THE DIELECTRIC.
7. TRIM THE CENTER CONDUCTOR .30 INCH FROM THE END OF THE DIELECTRIC.
8. PLACE THE OUTER CONTACT BODY OVER THE CENTER CONDUCTOR AND SLIDE IT OVER THE SHIELD. ENSURE THAT NO SHIELD STRANDS PROTRUDE FROM BETWEEN THE OUTER CONTACT BODY AND THE INNER CRIMP FERRULE.
9. REMOVE THE OUTER CONTACT BODY AND TRIM THE SHIELD AS NEEDED.
10. PLACE THE PIN CONTACT SUB-ASSEMBLY INTO A M22520/2-01 CRIMPING TOOL, SIDE OPPOSITE THE SELECTOR SWITCH. THE PLASTIC HOUSING ON THE PIN CONTACT SERVES AS A LOCATOR. SET CRIMP TOOL SELECTOR SWITCH TO #5. INSERT CENTER CONDUCTOR INTO CONTACT INSURING CABLE DIELECTRIC ENTERS PLASTIC AND HOUSING AND CENTER CONDUCTOR IS VISIBLE THRU VIEW HOLE IN CENTER CONTACT. CRIMP CONTACT.
11. SLIDE CRIMPED CONTACT SUB-ASSEMBLY INTO OUTER CONTACT BODY FIRMLY SEATING FERRULE. CRIMP FERRULE USING PROCRIMPER HANDTOOL #354940-1 AND DIE SET 58436-1 OR HANDTOOL M22520/5-01 WITH M22520/5-07 OR EQUIVALENT DIE SET. CRIMP USING .255" HEX CRIMP. POSITION CONTACT IN HEX CRIMPING TOOL SO DIVIDING LINE OF FERRULE AND CONTACT BODY IS APPROXIMATELY IN THE CENTER OF THE CRIMPING DIE.

1 MAT'L: BRASS PER ASTM-B-16
2 MAT'L: BERYLLIUM COPPER PER ASTM-B-196.
3 MAT'L: PTFE PER ASTM-D-1710.
4 FINISH: GOLD PLATE PER ASTM-B-488, TYPE 1, GRADE C, CLASS 1 OVER NICKEL .000050 [0.0013] THK PER AMS-QQ-N-290, CLASS 2.
5 FINISH: PASSIVATE PER AMS-QQ-P-35.
6 MAT'L: STAINLESS STEEL PER ASTM-A-240.
7 160 DP. FULL DIAMOND KNURL OVER THIS LENGTH.
8 MAT'L: POLYESTER MLDG. CMPD. PER MIL-M-24519, TYPE C.

AFC-240-75	1883434-1
CABLE	PART NO.

THIS DRAWING IS A CONTROLLED DOCUMENT.

DIMENSIONS: INCHES [mm]
TOLERANCE UNLESS OTHERWISE SPECIFIED:
0 PLC ± –
1 PLC ± –
2 PLC ± –
3 PLC ± .005 [0.13]
ANGLES ± –
MATERIAL: SEE CALOUTS
FINISH: SEE CALOUTS

DRN: C.C.THOMAS 8-16-08
CK: R.GROSS 8-16-08
APV: R.GROSS 8-16-08
PRODUCT SPEC: –
APPLICATION SPEC: –
WEIGHT: –

Tyco Electronics
Tyco Electronics Corporation
Harrisburg, PA 17105-3608

NAME: SOCKET CONTACT ASSY,COAX, SIZE 8,REAR RELEASE
–

SIZE: A1 CAGE CODE: 00779 DRAWING NO: C-1883434 RESTRICTED TO: –

CUSTOMER DRAWING SCALE: 8:1 SHEET 1 OF 1 REV: C

AMP 4805 REV 31MM2000

19JAN2009 up016412 H:\dacmed\1883434_1_c.dwg

Downloaded from Elcodis.com electronic components distributor