1. PARTS COMPLY WITH AMP SOLDERABILITY SPEC. NO. 109-11-3

2. CONTACT IS PLATED OVERALL WITH .000050 NICKEL, THEN .000030 GOLD OVER CONTACT LENGTH INDICATED AND MATTE TIN ON SOLDER TAIL END.

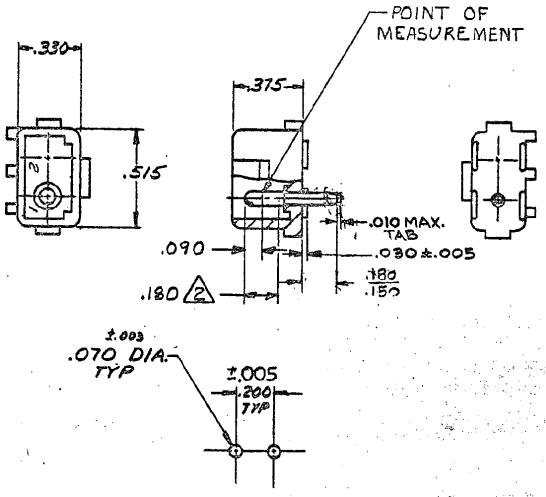

RECOMMENDED LAYOUT FOR .062 THICK P.C. BOARD

-2	-NATURAL	-GOLD 2
6- -1	-BLUE	-PRE TIN
2- -1	-RED	
350539-1	NYLON - NATURAL	COPPER ALLOY-PRE-TIN
ASSEMBLY NO.	HSG MATL & COLOR	PIN MATL & FINISH

REQUIRED PER ASSEMBLY

N1	REVISED PER ECO-11-005294	RK	HMR 08APR11
LTR	REVISION RECORD	DR	CHK DATE

DESCRIPTION

© 1973 BY AMP INCORPORATED. ALL RIGHTS RESERVED.
AMP PRODUCTS COVERED BY PATENTS AND/OR PATENTS PENDING.

CUSTOMER COPY REFERENCE ONLY

DR 9. Edwards 3-29-73
CHK 4/9/73
DR J. Kunkle
APP J. Kunkle

MATERIAL AND FINISH: SEE TABLE

WIRE RANGE — INSULATION

TOL UNLESS EXCEPT AS NOTED ±.010 .XX ±.005 .XXX ±.002 ANGLE ±1°

TE Connectivity

CLASS: .084 DIA. PIN
TYPE: POSITIVE LOCK

LOC CM B NO 350539 REV N1

2 CIRCUIT MATE-N-LOK P.C. BOARD HEADER

NUMBER 350539

WAS P-73-6101

DIMENSIONS IN INCHES. DO NOT SCALE PRINT.

Downloaded from Elcodis.com electronic components distributor