DO NOT SCALE
DIMENSIONS IN mm

METRIC

THIRD ANGLE PROJECTION

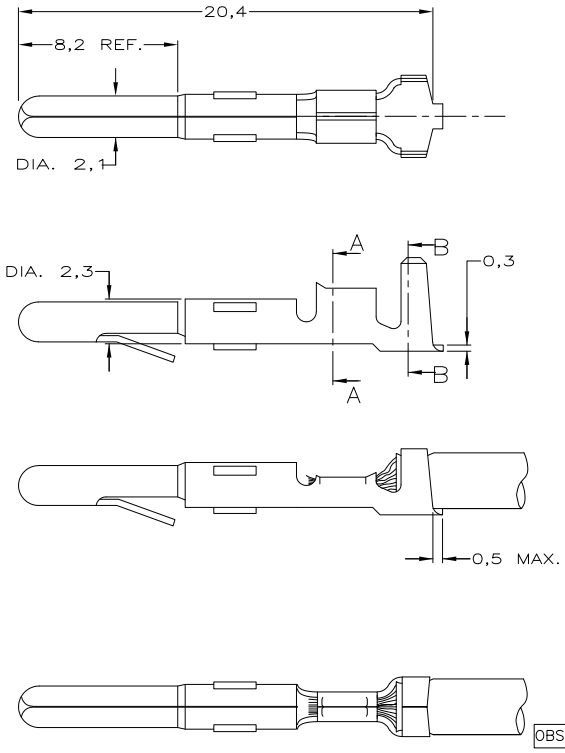

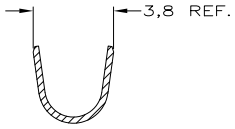

SECTION B–B

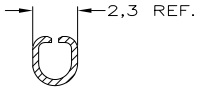

SECTION A–A

WIRE RANGE : 1,0–2,5 mm
INSULATION RANGE : 2,9 MAX. DIA.

		–	–	–
			–	–
		–	–	–
		–	–	–
		–	–	–
		–	–	–
		–	–	–
		–	–	–
		PRE–TINPLATED	PHOSPHOR BR.	163307–4
OBSOLETE		UNPLATED	PHOSPHOR BR.	△1 ~~163307–3~~
		PRE–TINPLATED	BRASS	163307–2
		UNPLATED	BRASS	163307–1
	–	PLATING	MATERIAL	PARTNUMBER

△1 OBSOLETE

LTR.	REVISION RECORD	DR.	CHK.	DATE
D2	REVISED PER ECO–11–005294	RK	HMR	05APR11

CUSTOMER DRAWING — FOR REFERENCE ONLY WILL NOT BE UPDATED

© COPYRIGHT – BY –
ALL INTERNATIONAL RIGHTS RESERVED.

THIS DRAWING IS UNPUBLISHED
~~RELEASED FOR PUBLICATION – ,19 –~~

TE Connectivity

NAME
PIN MATE–N–LOK.

DR.: J.v.LIEMPT	CHK.: A.BIJNEN.	APP.: M.v.DRIEL	DWG.No. C–163307	REV.LTR. D2	SHEET 1 OF 1	A3
DATE: 24 OCT 96	DATE: –	DATE: –				

R6–210 (REV.04–91)

Downloaded from Elcodis.com electronic components distributor