DRAWING MADE IN THIRD ANGLE PROJECTION

THIS DRAWING IS UNPUBLISHED. RELEASED FOR PUBLICATION ,19 .

© COPYRIGHT 19 BY AMP INCORPORATED. ALL INTERNATIONAL RIGHTS RESERVED.

MOD	LOC	DIST
1	BD	39

REVISIONS				
ZONE	LTR	DESCRIPTION	DATE	APPD
	D	REDRAWN PER ECN 806093	03/16/92	–

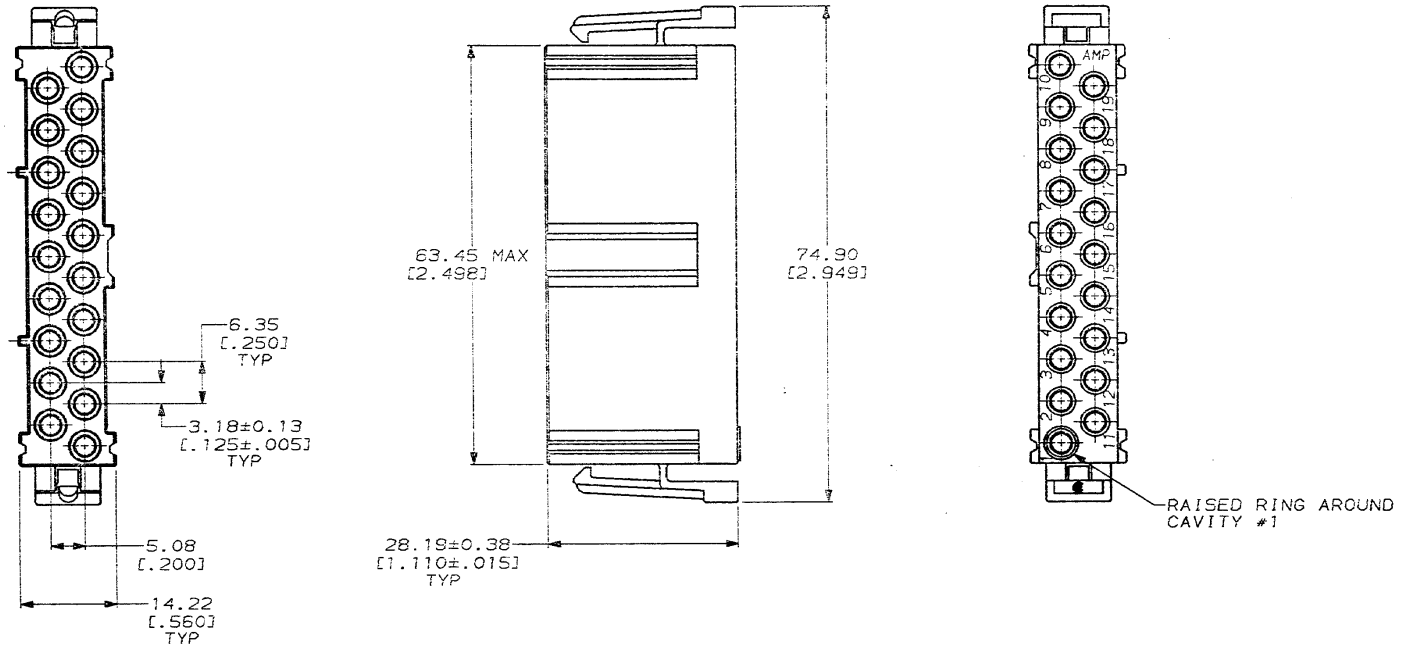

208100

208100-1

PART NO

DO NOT SCALE PRINT. UNLESS SPECIFIED DIMENSIONS IN mm [INCHES] TOLERANCES ON : 2 PLC DEC ± 0.25 [.010] 3 PLC DEC ± – ANGLES ± –	DR 03/16/92 L.SIPE	AMP Incorporated Harrisburg, PA 17105-3608
	CHK 3-18-92 R.STONE	
	APPD 3-18-92 A.TRAVIS	NAME HOUSING, PLUG, 19 POSN, METRIMATE
MATERIAL NYLON, UL-94V-0 RATED, RED	APPD 3-18-92 C.ROHDE	
	PRODUCT SPEC –	
FINISH –	APPLICATION SPEC – –	SIZE © CAGE CODE 00779 DRAWING NO 208100
	WEIGHT –	SCALE 2:1 SHEET 1 OF 1

AMP 1471-6 REV 6-89

15 MAR 1992 4:40:06 amp25578@ae/sa026a/dept4023/amp25578/u.drawings/u.6093

CUSTOMER DRAWING

Downloaded from Elcodis.com electronic components distributor