THIS DRAWING IS UNPUBLISHED. RELEASED FOR PUBLICATION -,-- -

© COPYRIGHT - - By - - ALL RIGHTS RESERVED.

LAST	DIGIT
FT	13

REVISIONS

P	LTR	DESCRIPTION	DATE	DRN	APVD
	B1	REVISED PER ECO-11-004917	11MAR11	RK	HMR

1. WIRE SIZE AND AMP LOGO APPEAR ON OUTSIDE OF WIRE BARREL.
2. SOCKET & STRIP CONTACT: 0.76μ [.000030] MIN GOLD PER MIL-G-45204 ON CONTACT MATING END, GOLD FLASH ON REMAINDER , ALL OVER 1.27μm [.000050] MIN NICKEL PER QQ-N-390.
   RETENTION CLIP: 2.54μm [.000100] MIN NICKEL PER QQ-N-290.
3. RETENTION CLIP: PHOSPHOR BRONZE PER QQ-B-750.
   SOCKET CONTACT: COPPER PER QQ-C-576.
   CONTACT STRIP: BERYLLIUM COPPER PER QQ-C-533.
4. SOCKET CONTACT: 1.27μm [.000050] MIN SILVER PER QQ-S-365, ALL OVER 1.27μm [.000050] MIN NICKEL PER QQ-N-290.
   CONTACT STRIP: 5.08μm [.000200] MIN SILVER PER QQ-S-365, ALL OVER 1.02 μm [.000040] MIN NICKEL PER QQ-N-290.
   RETENTION CLIP: 2.54μm [.000100] MIN NICKEL PER QQ-N-290.

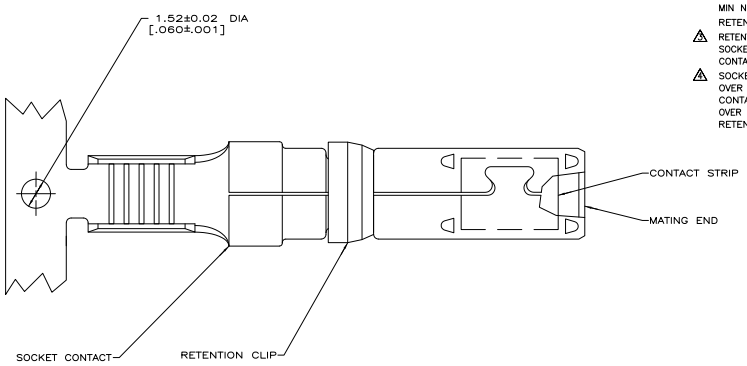

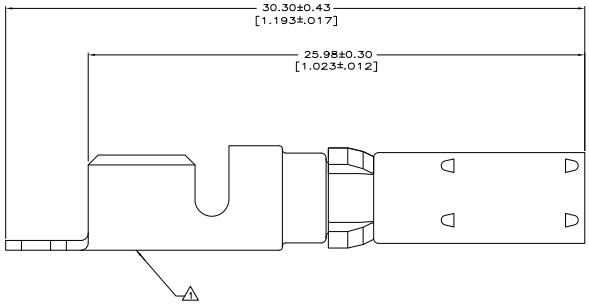

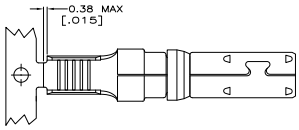

DETAIL X
SCALE 5:1

2	DETAIL X	213847-4
2 4	DETAIL X	213847-3
2	–	213847-2
4	–	213847-1
FINISH	LOOSE PIECE	PART NUMBER

THIS DRAWING IS A CONTROLLED DOCUMENT.

DIMENSIONS: mm[INCHES]

TOLERANCES UNLESS OTHERWISE SPECIFIED:
0 PLC ± –
1 PLC ± –
2 PLC ± –
3 PLC ± –
ANGLES ± –

MATERIAL 3
FINISH SEE TABLE

DRN W.G.LENKER 30 JUL 96
CK R.STONE 05 AUG 96
APVD G.STEINHAUER 06 AUG 96
PRODUCT SPEC –
APPLICATION SPEC –
WEIGHT –
CUSTOMER DRAWING

TE Connectivity

NAME SOCKET CONTACT ASSEMBLY, 14-12 AWG, .125 POWERBAND

SIZE	CAGE CODE	DRAWING NO	RESTRICTED TO
A1	00779	213847	–

SCALE 10:1 SHEET 1 OF 1 REV B1

4805 (3/11)

Downloaded from Elcodis.com electronic components distributor