THIS DRAWING IS UNPUBLISHED. RELEASED FOR PUBLICATION – .N/A .

© COPYRIGHT N/A BY TYCO ELECTRONICS CORPORATION. ALL RIGHTS RESERVED.

LOC	DIST
DF	XO

REVISIONS

P	LTR	DESCRIPTION	DATE	DWN	APVD
	D	REV PER ECO-05-002598	05-05	AA	FB

COMPONENT	MATERIAL	FINISH
– HOUSING BUSHING –	STAINLESS STEEL PER ASTM-A-484 OR ASTM-A-582 TYPE 303	PASSIVATED PER ASTM-A-380 –
– DIELECTRIC –	TFE FLUORCARBON PER ASTM-D-1457 OR MIL-P-19468	– – –
– CENTER CONTACT –	BERYLLIUM COPPER PER ASTM-B-196 ALLOY C17300	GOLD PLATED PER ASTM-B-488 OVER NICKEL PER QQ-N-290

ENVIRONMENTAL
TEMPERATURE RATING: -55°C TO +125°C
VIBRATION: MIL-STD-202, METHOD 204, CONDITION D; 20Gs
SHOCK: MIL-STD-202, METHOD 213, CONDITION 1: 100Gs
MOISTURE RESISTANCE: MIL-STD-202, METHOD 106
CORROSION: MIL-STD-202, METHOD 101, CONDITION B.
THERMAL SHOCK: MIL-STD-202, METHOD 107, CONDITION B –

MECHANICAL		
INTERFACE DIMENSIONS: SEE CATALOG		
RECOMMENDED MATING TORQUE: N/A		
FORCE TO ENGAGE & DISENGAGE (IN-LBS MAX:) 2.0		
WEIGHT (GRAMS): TBD		
MATING CHARACTERISTICS:	INSERTION (MAX LBS) 2.0	
	WITHDRAWAL (MIN OZ): 1.0	
CABLE RETENTION:	AXIAL FORCE (LBS) N/A	
	TORQUE (IN-OZ): N/A	
CENTER CONTACT CAPTIVATION:	AXIAL (LBS): 4.0	
	RADIAL (IN-OZ): N/A	

ELECTRICAL		
NORMAL IMPEDANCE (OHMS): 50±1		
FREQUENCE RANGE (GHz): DC TO 50		
VOLT RATING @ SEA LEVEL (VRMS MAX): N/A		
VSWR: DC TO 18GHz: 1.11 MAX; 18 TO 25.5GHz: 1.13 MAX; 25.5 TO 50GHz: 1.29 MAX		
INSERTION LOSS: (dB MAX): .07 X √f(GHz)		
RF LEAKAGE (dB MIN) (INTERFACE ONLY, FULLY MATED):-[90-f(GHz)]		
CORONA 70,000 FT (VRMS MIN): 150		
DIELECTRIC WITHSTANDING VOLTAGE (VRMS MIN) AT SEA LEVEL: 500		
I.R. (MEGOHMS MIN): 5,000		
RF HIGH POTENTIAL AT SEA LEVEL (VRMS MIN @ 5 MHz): 600		
CONTACT RESISTANCE (MILLIOHMS MAX):	CENTER CONTACT: 4.0	
	OUTER CONTACT: 4.0	
	CABLE TO HOUSING: N/A	

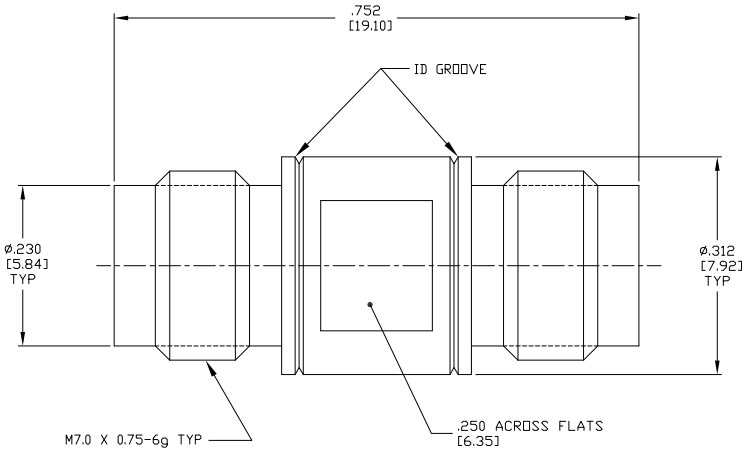

1083655

1083655-1
PART NO.

THIS DRAWING IS A CONTROLLED DOCUMENT.

DIMENSIONS: INCHES

TOLERANCES UNLESS OTHERWISE SPECIFIED:
0 PLC ± –
1 PLC ± –
2 PLC ± –
3 PLC ± .005 [0.13]
4 PLC ± –
ANGLES ± –

MATERIAL: SEE TABLE
FINISH: SEE TABLE

DWN C.C.THOMAS 03DEC2003
CHK R.GROSS 12-4-03
APVD R.GROSS 12-4-03
PRODUCT SPEC –
APPLICATION SPEC –
WEIGHT –

Tyco Electronics Corporation
Harrisburg, PA 17105

NAME: OS-50 JACK TO JACK ADAPTER – –

SIZE	CAGE CODE	DRAWING NO	RESTRICTED TO
A2	00779	C-1083655	–

CUSTOMER DRAWING | SCALE 10:1 | SHEET 1 OF 1 | REV D

AMP 1471-9 REV 31MAR2000

Downloaded from Elcodis.com electronic components distributor