THIS DRAWING IS UNPUBLISHED. RELEASED FOR PUBLICATION .19 .
© COPYRIGHT 19 BY AMP INCORPORATED. ALL RIGHTS RESERVED.

LOC	DIST
DF	50

REVISIONS

P	LTR	DESCRIPTION	DATE	DWN	APVD
	D	ADD -3 & -4 PER 063D-0299-00	6-00	CT	DE

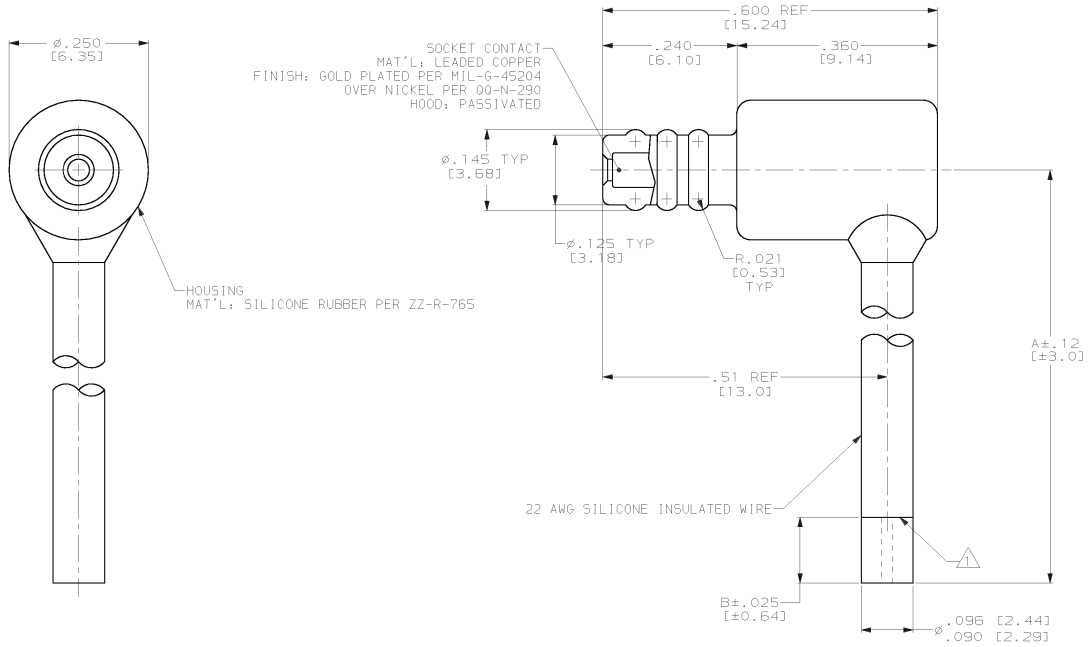

1. INSULATION CUT BUT NOT REMOVED.
2. MARKED PER MIL-STD-130.

DIM B	DIM A	PART NUMBER
-	4.00 [101.6]	1218134-4
-	8.00 [203.2]	1218134-3
.250 [6.35]	6.63 [168.4]	1218134-2
-	10.00 [254.0]	1218134-1

THIS DRAWING IS A CONTROLLED DOCUMENT.

DIMENSIONS: INCHES [mm]

TOLERANCES UNLESS OTHERWISE SPECIFIED:
0 PLC ±-
1 PLC ±-
2 PLC ±-
3 PLC ±.005 [0.13]
4 PLC ±-
ANGLES ±-

MATERIAL -
FINISH -

DWN C.C.THOMAS 1-8-98
CHK D.EABY 1-9-98
APVD D.EABY 1-9-98
PRODUCT SPEC -
APPLICATION SPEC -
WEIGHT -

AMP Incorporated
Harrisburg, PA 17105-3608

NAME PLUG ASSY,RGL,LGH

SIZE A2 | CAGE CODE 00779 | DRAWING NO C-1218134

CUSTOMER DRAWING | SCALE 8:1 | SHEET 1 OF 1 | REV D

AMP 1471-9 REV 23FEB95

22-JUN-00 10:44:58 amp16412 /home/amp16412/edmmod

Downloaded from Elcodis.com electronic components distributor