THIS DRAWING IS UNPUBLISHED. RELEASED FOR PUBLICATION ,19 .
© COPYRIGHT 19 BY AMP INCORPORATED. ALL RIGHTS RESERVED.

LOC	DIST
BD	39

REVISIONS

P	LTR	DESCRIPTION	DATE	DWN	APVD
	0	RLSE -1 PRE NPR 5430 WAS 95-2258-2-1	10-10-95	RSK	RSK

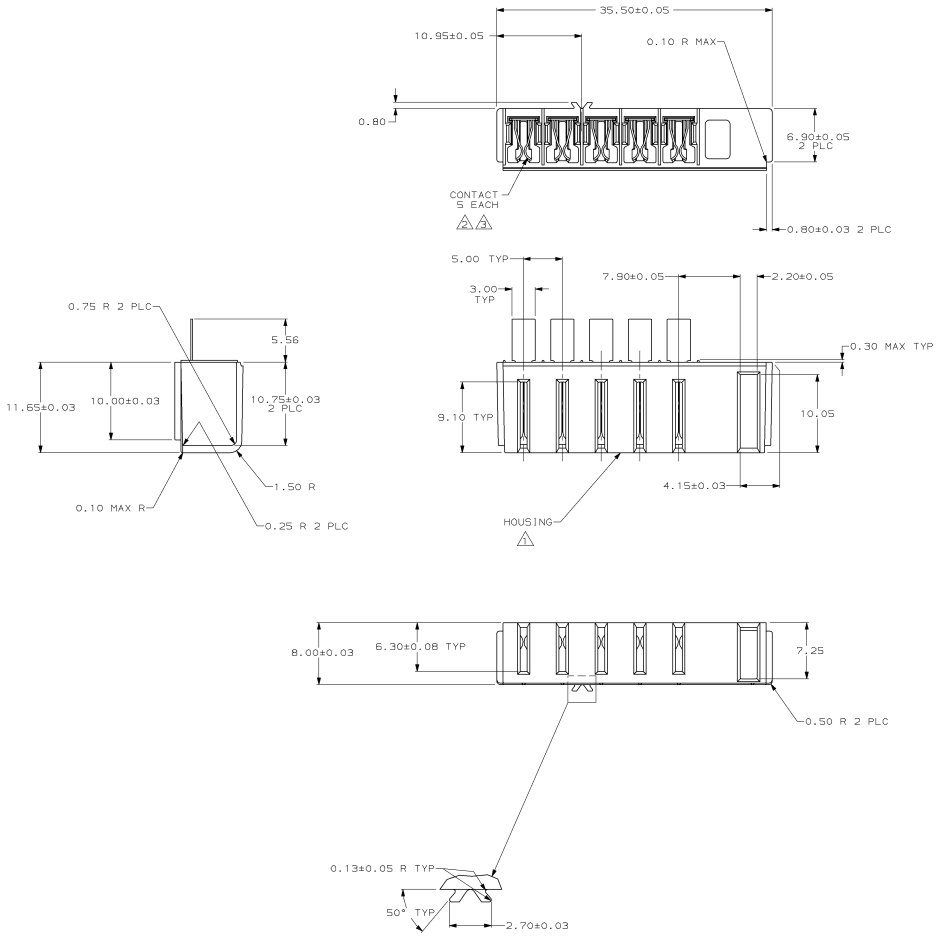

SCALE 8:1

1. HOUSING: LEXAN 940, BLACK.
2. CONTACTS: PHOSPHOR BRONZE.
3. FINISH: PRE-NICKEL.

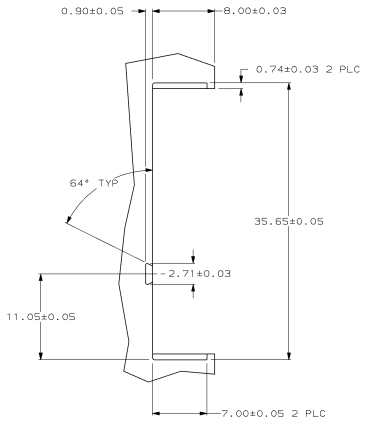

SUGGESTED CAVITY

THIS DRAWING IS CONTROLLED DOCUMENT FOR AMP INCORPORATED. IT IS THEIR PROPERTY AND MUST BE RETURNED UPON REQUEST. REPRODUCTION WHOLE OR IMPORTANT PARTS FOR THIRD PARTY PROHIBITED.	DWN R.S.KLINE 10-10-95 CHK R.S.KLINE 10-12-95 APVD R.S.KLINE 10-12-95	AMP	AMP Incorporated Harrisburg, PA 17105-3608
DIMENSIONS: MM DECIMALS UNLESS OTHERWISE SPECIFIED: 0 PLC ±- 1 PLC ±0. 2 PLC ±0.13 3 PLC ±- 4 PLC ±- ANGLES ±2°	PRODUCT SPEC – APPLICATION SPEC – WEIGHT –	NAME: INSERT ASSEMBLY, 5 POSN, DOVETAIL LOCATOR, 10.8V KEY SLOT, BATTERY INTERCONNECT	
MATERIAL: SEE CALLOUTS FINISH: SEE CALLOUTS	CUSTOMER DRAWING	SIZE A1 / CAGE CODE 00779 / DRAWING NO C-787614	SCALE 4:1 / SHEET 1 OF 1 / REV 0

787614-1
PART NO

AMP 4MKS REV 2BMA194
10-OCT-95 10:51:56 amp33732 /home/srv6350/dsk01/dept4423/amp33732/edmod

Downloaded from Elcodis.com electronic components distributor