THIS DRAWING IS UNPUBLISHED. RELEASED FOR PUBLICATION 2006
© COPYRIGHT 2006 - ALL RIGHTS RESERVED.

LOC	DIST
A1	-

REVISIONS

P	LTR	DESCRIPTION	DATE	DWN	APVD
	B1	ECR-09-026756	09FEB2010	SR	ME

PANEL CUT-OUT FOR CONTACT INSERT
WHEN USED WITHOUT HOUSING

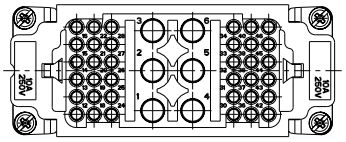

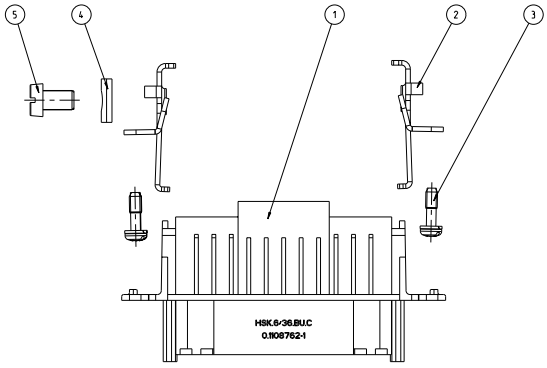

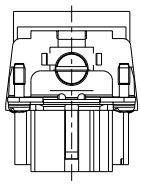

NOTES

1 POVER CONTACT : 1 TO 12
OUTER DIMENSIONS OF INSULATION: MAX. Ø6.5mm
SIGNAL CONTACT: A AND B
OUTER DIMENSIONS OF INSULATION: MAX. Ø3.2mm

2 SUITABLE HOOD SIZE 6
SERIES HB, HD, EMV, AND HIP

⚠ GROUNDING CONTACT

4 STANDARDS:
DIN EN 61984; DIN EN 60664-1

5 PACKAGING:
5 PIECES IN A CARTON BOX

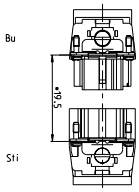

*DISTANCE ARRANGEMENT
VIEW FROM TERMINATION SIDE

CONTACT ARRANGEMENT VIEW FROM
TERMINATION SIDE

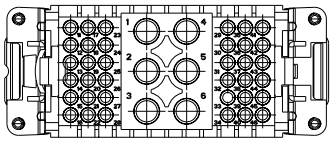

QTY	DESCRIPTION	MATERIAL	SURFACE	ITEM
1	CYLINDER SCREW, M5	STEEL	NICKEL PLATED	5
1	CLIP TAB	STEEL	NICKEL PLATED	4
4	FIXING SCREW ASSY	STEEL	NICKEL PLATED	3
2	GRUNDING CONTACT-SOCKET	Cu Zn37 F38	NICKEL PLATED	2
1	SOCKET INSERT	VALOX		1
0-1				

THIS DRAWING IS A CONTROLLED DOCUMENT.

DIMENSIONS: mm

TOLERANCES UNLESS OTHERWISE SPECIFIED:
0 PLC ±
1 PLC ±
2 PLC ±
3 PLC ±
4 PLC ±
ANGLES ±1°

MATERIAL -
FINISH -

DWN T.SCHNEIDER 09FEB2010
CHK T.SCHNURPFEIL 09FEB2010
APVD -
PRODUCT SPEC -
APPLICATION SPEC -
WEIGHT -
CUSTOMER DRAWING

TE Connectivity

NAME HSK.6/36 FEMALE INSERT HSK.6/36
ASSY HSK.6/36
-

SIZE A1 | CAGE CODE 00779 | DRAWING NO C-1108762 | RESTRICTED TO -

SCALE 2:1 | SHEET 1 OF 1 | REV B1

4865 (3/11)
Pro/ENGINEER DRAWING

Downloaded from Elcodis.com electronic components distributor