THIS DRAWING IS UNPUBLISHED. RELEASED FOR PUBLICATION 2008

© COPYRIGHT 2008 BY TYCO ELECTRONICS CORPORATION. ALL RIGHTS RESERVED.

LOC	DIST
A1	-

REVISIONS

P	LTR	DESCRIPTION	DATE	DWN	APVD
	A1	NEW DRAWING PUBLISHED	04FEB2008	N.T.	R.K.
	A2	ECR-08-030470	08DEC2008	N.T.	R.K.
	A3	ECR-09-012142	28MAY2009	N.T.	T.K.

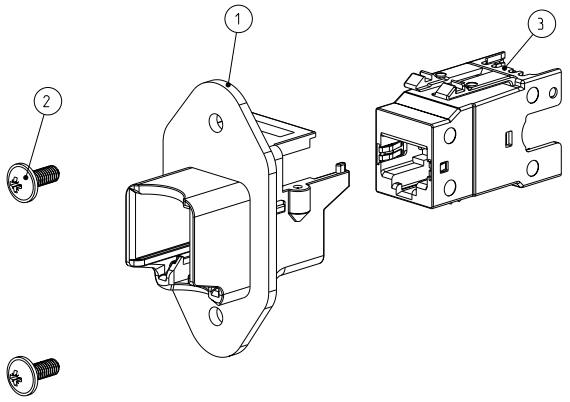

SINGLE PACKING: PLASTIC BAG (MINI GRIP) WITH MANUAL.
MULTI PACKING: 50 PIECE ITEM NO. 1 IN CORD TENSIONING BAG+
100 PIECE ITEM NO. 2 IN PLASTIC BAG (MINI GRIP) +
50 PIECE ITEM NO. 3 FOLDING BOX +
PACKED IN CORRUGATED SHIPPING BOX WITH MANUAL.

EINZELVERPACKUNG: KUNSTOFFBEUTEL (MINI GRIP) MIT ANLEITUNG.
MEHRFACHVERPACKUNG: 50 STUECK POS. 1 IN KORDELZUG BEUTEL +
100 STUECK POS. 2 IN KUNSTSTOFFBEUTEL (MINI GRIP) +
50 STUECK POS. 3 IN FALTSCHACHTEL +
VERPACKT IN VERSANDKARTON MIT ANLEITUNG.

CUT OUT FOR FITTING REQUIREMENT

AUSSCHNITT FUER EINBAU BEDINGUNG

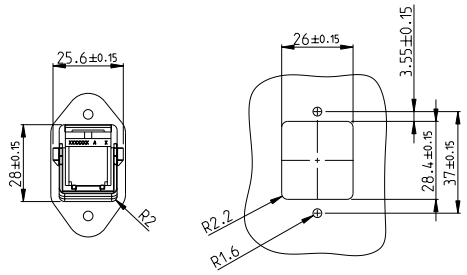

SCALE 1:1 / M 1:1 SCALE 1:1 / 1:1

-	-	1	1	-	-	MANUAL	4
-	-	50	1	-	-	AMP SL-TWIST-6S SL JACK	3
-	-	100	2	-	-	ROUND HEAD SCREW M3 x 8	2
-	-	50	1	-	-	FRAME, RJ45 CONNECTOR IP20	1
-	-	-2	-1	DWG. SIZE	PARTNUMBER	DESCRIPTION	ITEM NO
-	-	-	-	←	REVISION OF EACH ASSY NO. (WHEN BLANK, USE DWG. REVISION)		
QTY REQD PER ASSY						PARTS LIST	

THIS DRAWING IS A CONTROLLED DOCUMENT FOR TYCO ELECTRONICS CORPORATION IT IS SUBJECT TO CHANGE AND THE CONTROLLING ENGINEERING ORGANIZATION SHOULD BE CONTACTED FOR THE LATEST REVISION.

DIMENSIONS: mm

TOLERANCES UNLESS OTHERWISE SPECIFIED:
0 PLC ±-
1 PLC ±-
2 PLC ±-
3 PLC ±-
4 PLC ±-
ANGLES ±1°

MATERIAL -
FINISH -

DWN 24NOV2008 N.Thirunavukkkarasu
CHK 24NOV2008 W.BOECK
APVD 24NOV2008 R.KRAEMER
PRODUCT SPEC -
APPLICATION SPEC -
WEIGHT -

Tyco Electronics
Tyco Electronics AMP GmbH
64625 Bensheim (Germany)

NAME
ASSY. FRAME, RJ45 CONNECTOR IP20, CAT6
ASSY. RAHMEN RJ45 CONNECTOR IP20, CAT6

SIZE	CAGE CODE	DRAWING NO	RESTRICTED TO
A2	00779	C-1987671	-

CUSTOMER DRAWING SCALE 2:1 SHEET 1 OF 1 REV A3

AMP 1471-9 REV 31MAR2000

Pro/ENGINEER DRAWING

Downloaded from Elcodis.com electronic components distributor