THIS DRAWING IS UNPUBLISHED. RELEASED FOR PUBLICATION -.-- -
© COPYRIGHT - - BY TYCO ELECTRONICS CORPORATION. ALL RIGHTS RESERVED.

LOC	DIST
DF	A5

REVISIONS

P	LTR	DESCRIPTION	DATE	DRN	APVD
-	E	REV PER DH14-0208-04	03NOV05	TK	CT

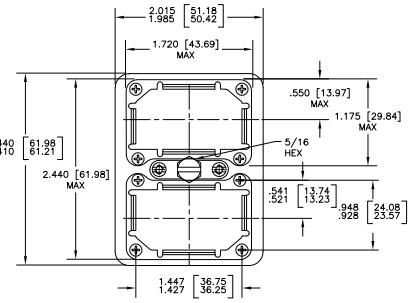

PLUG SHELL

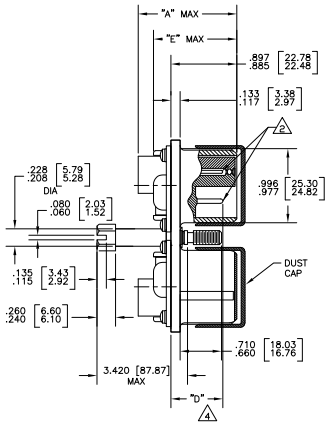

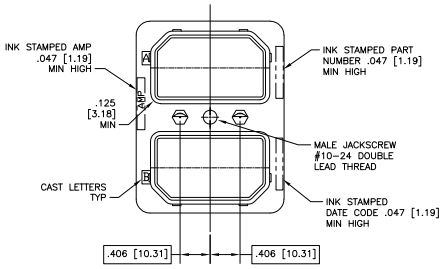

RECEPT. SHELL

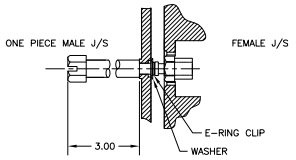

JACKSCREW ASSY (MATED)

	INSERT ARRANGEMENT														
	C2	C3	8	C8	D8	26	32C2	33C4	40	40C1	45	57	67	88	106
"A" MAX	1.201 [30.51]	1.201 [30.51]	1.425 [36.20]	1.201 [30.51]	1.541 [39.14]	1.541 [39.14]	1.595 [40.51]	1.616 [41.05]	1.425 [36.20]	1.595 [40.51]	1.541 [39.14]	1.541 [39.14]	1.425 [36.20]	1.319 [33.50]	1.541 [39.14]
"E" MAX	.966 [24.54]	.966 [24.54]	1.340 [34.04]	.966 [24.54]	1.340 [34.04]	1.340 [34.04]	1.340 [34.04]	1.340 [34.04]	1.340 [34.04]	1.340 [34.04]	1.340 [34.04]	1.340 [34.04]	1.340 [34.04]	1.114 [28.29]	1.340 [34.04]

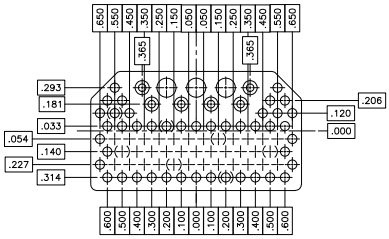

"B" 4				"C"				"D" 4			
22	20	16	12	22	20	16	12	22	20	16	12
.736 [18.69]	.827 [21.00]	.782 [19.86]	.793 [20.14]	.797 [20.24]	.893 [22.68]	.893 [22.68]	.893 [22.68]	.737 [18.72]	.700 [17.78]	.824 [20.93]	.824 [20.93]
.688 [17.48]	.769 [19.53]	.735 [18.67]	.746 [18.95]	.769 [19.53]	.865 [21.97]	.865 [21.97]	.865 [21.97]	.688 [17.48]	.585 [14.86]	.746 [18.95]	.746 [18.95]

PART NO.	ARRANGEMENTS	
	MODULE A	MODULE B
211027-2	88S	88S
211027-1	88S	88S

8

1. MATERIAL & FINISH
   SHELL: DIE CAST ALUM. ALLOY PER FED SPEC QQ-A-591
   FINISH: CAD. PLATED PER QQ-P-416, TYPE I, CLASS 2
   YELLOW CHROMATE CONVERSION.
   INSULATOR, HARD: EPOXY PER MIL-M-24325.
   INSULATOR, SOFT: FLUOROSILICONE RUBBER, COLOR: BLUE.
   GROMMET PROTECTOR: ALUM. ALLOY, FINISH: BLUE EPOXY.
   SCREWS AND WASHERS: STAINLESS STEEL, PASSIVATE
   MALE JACKSCREW: STAINLESS STEEL
   POLARIZING POSTS AND NUTS: STAINLESS STEEL
   DUST CAP: CLEAR VINYL
2. CONTACTS SHOWN IN POSITION FOR ILLUSTRATION ONLY, ARE INCLUDED IN A CONTAINER WITHIN CONNECTOR PACKAGE FOR SHIPMENT.
3. CONNECTOR MEETS AMP PRODUCT SPEC 108-10,019.
4. FOR CONTACT SIZE 22 DIMENSION "B" REPRESENTS PIN CONTACTS & DIMENSION "D" REPRESENTS SOCKET CONTACTS.
5. ALL METRIC DIMENSIONS ARE SHOWN IN PARENTHESIS.
6. CONTACTS NOT INCLUDED AND MUST BE ORDERED SEPARATELY (-1 ASSY)
7. FOR MATING CONNECTOR SEE 211027.
8. SAME AS -1 EXCEPT: CONTACTS , TOOLS AND SEALING PLUGS INCLUDED.

○ INDICATES SIZE 22 CAVITIES (79 PLACES)
◎ INDICATES SIZE 20 CAVITIES (6 PLACES)
◯ INDICATES SIZE 16 CAVITIES (3 PLACES)

THIS DRAWING IS A CONTROLLED DOCUMENT.

DIMENSIONS: INCHES

TOLERANCE UNLESS OTHERWISE SPECIFIED: 0 PLC ± - ; 1 PLC ± - ; 2 PLC ± - ; 3 PLC ± - ; 4 PLC ± - ; ANGLES ± -

MATERIAL 1 FINISH 1

TITLE TERESA HECK 4-2-02
DR 4-27-02
APVD L LAMYER 4-27-02
PRODUCT SPEC —
APPLICATION SPEC —
WEIGHT —

Tyco Electronics Corporation
Harrisburg, PA 17105-3608

NAME PLUG CONNECTOR INSTALLATION (WITH CENTER MALE JACKSCREW)

SIZE A1 CAGE CODE 00779 DRAWING NO C-211027 RESTRICTED TO —

CUSTOMER DRAWING SCALE 1:1 SHEET 1 OF 1 REV E

AMP 4805 REV 31MM2000

10JAN06 3:05pm US07T105 H:\drmod\211027-c_1.dwg

Downloaded from Elcodis.com electronic components distributor