THIS DRAWING IS UNPUBLISHED. RELEASED FOR PUBLICATION -.-.-
© COPYRIGHT - - BY TYCO ELECTRONICS CORPORATION. ALL RIGHTS RESERVED.

| UOM | DIST |
|---|---|
| DF | AO |

REVISIONS

| # | LTR | DESCRIPTION | DATE | DRN | APVD |
|---|---|---|---|---|---|
| | AC | REV PER ECO 08-012102 | 5-19-08 | CT | KT |

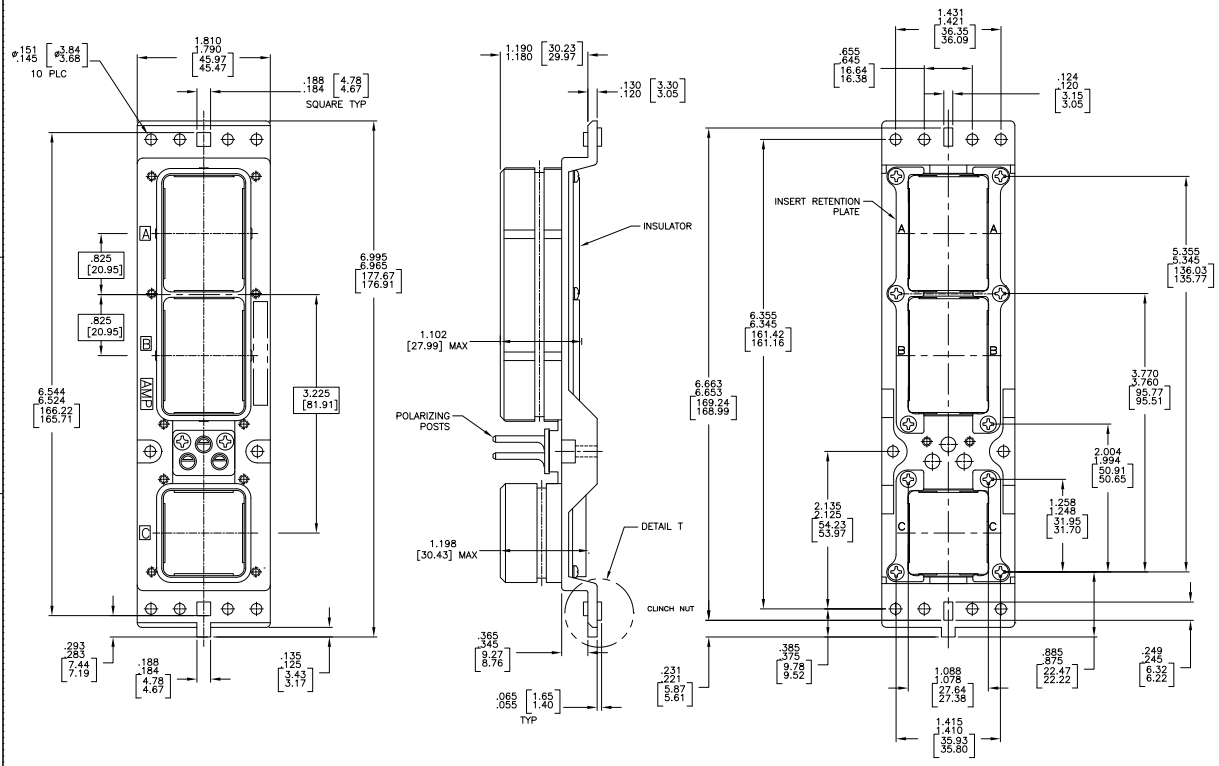


| DESCRIPTIVE NUMBER | PART NUMBER |
|---|---|
| BACC66H21C04AA01 | 4-208973-1 |
| NIC66H52B03AA0 | 4-208973-0 |
| NIC66H21B40AA1 | 3-208973-9 |
| NIC66H20B40AA1 | 3-208973-8 |
| INSERTS:150/OPEN/OPEN,STD MTG,NO CONTACTS, 5 5 | 3-208973-7 |
| INSERTS:150/150/OPEN,STD MTG,NO CONTACTS | 3-208973-6 |
| NIC66H21C06CD0 | 3-208973-5 |
| NIC66H21B06CD1 | 3-208973-4 |
| NIC66H21B06CD0 | 3-208973-3 |
| NIC66H21C09AA0 | 3-208973-2 |
| NIC66H20C00AA0 | 3-208973-1 |
| NIC66H21C00AA0 | 3-208973-0 |
| NIC66H20B08AA0 | 2-208973-9 |
| NIC66H20B03AA0 | 2-208973-8 |
| – | 2-208973-7 |
| CUST RESTRICTED DWG 2-208973-6 | 2-208973-6 |
| CUST RESTRICTED DWG 2-208973-5 | 2-208973-5 |
| NIC66H25B01AA1 W/ SPECIAL GROMMET | 2-208973-4 |
| NIC66H23B01AA1 W/ SPECIAL GROMMET | 2-208973-3 |
| NIC66H26B01AA1 | 2-208973-2 |
| NIC66H25B03AA1 W/ SPECIAL GROMMET | 2-208973-1 |
| NIC66H21C29AA0 | 2-208973-0 |
| NIC66H23B05AA1 W/ SPECIAL GROMMET | 1-208973-9 |
| NIC66H25B04AA1 W/ SPECIAL GROMMET | 1-208973-8 |
| CUST RESTRICTED DWG 1-208973-7 | 1-208973-7 |
| CUST RESTRICTED DWG 1-208973-6 | 1-208973-6 |
| CUST RESTRICTED DWG 1-208973-5 | 1-208973-5 |
| NIC66H23B08AA0 | 1-208973-4 |
| NIC66H21B04AA0 | 1-208973-3 |
| NIC66H21B05AA0 | 1-208973-2 |
| NIC66H26B02AA1 | 1-208973-1 |
| NIC66H21B01AA1 | 1-208973-0 |
| ADVANCE P/N | 208973-9 |
| NIC66H25C01AA1 | 208973-8 |
| NIC66H25C01AA0 | 208973-7 |
| NIC66H23C01AA1 | 208973-6 |
| NIC66H23B01AA0 | 208973-5 |
| ADVANCE P/N | 208973-4 |
| NIC66H21C01AA0 | 208973-3 |
| NIC66H24A01AA1 | 208973-2 |
| NIC66H21B01AA0 | 208973-1 |

1. CONNECTOR DIMENSIONS ARE PER ARINC 600 SPECIFICATION
2. KEYING SHOWN IN POSITION "01" FOR REFERENCE ONLY. CONNECTOR SHIPPED WITH KEYING PER ORDERING INSTRUCTIONS. FOR POSITION "00" KEYING SHIPPED UNASSEMBLED.
3. FOR SHIPMENT CONTACTS (IF ORDERED) ARE INCLUDED IN A CONTAINER WITHIN THE CONNECTOR PACKAGE. COAX CONTACTS ARE NOT SUPPLIED AND MUST BE ORDERED SEPARATELY.

4 SPECIAL WITH INSERTS 150/71C1/34 STANDARD MOUNTING. ALL CONTACTS ORDERED SEPARATELY. KEYED TO POSITION 01

5 PRELIMINARY PART NUMBER, NOT RELEASED FOR PRODUCTION

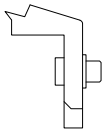

DETAIL T
CLINCH NUT
8 PLC
FOR -33,-34 AND -35 ONLY

| COMPONENT | MATERIAL | FINISH |
|---|---|---|
| SHELL – | DIE CAST ALUMINUM PER ASTM-B-85 – | CHEMICAL CONVERSION COATING PER MIL-C-5541, CLASS 1A |
| RETENTION PLATES – | ALUMINUM ALLOY PER ASTM-B-209 – | CHEMICAL CONVERSION COATING PER MIL-C-5541, CLASS 1A |
| SCREWS AND LOCKWASHERS – | STEEL OR STAINLESS STEEL | CHROMATE OVER ZINC OR PASSIVATED |
| POLARIZING POSTS – | ZINC ALLOY PER ASTM-B-86 – | ELECTROLESS NICKEL PER MIL-C-26074, CLASS 4, GRADE B |
| INSERTS – | THERMOSET – | – – |
| FILLER PLUG – | TEFLON – | – – |
| POLARIZING POST RETAINING PLATE – | ALUMINUM ALLOY PER ASTM-B-209 – | BLUE ANODIZED PER MIL-A-8625 – |

THIS DRAWING IS A CONTROLLED DOCUMENT.

DIMENSIONS: INCHES

TOLERANCE UNLESS OTHERWISE SPECIFIED:
0 PLC ± –
1 PLC ± –
2 PLC ± –
3 PLC ± –
4 PLC ± –
ANGLES ± –

MATERIAL: SEE TABLE
FINISH: SEE TABLE

| | | |
|---|---|---|
| DRN | C.C.THOMAS | 7-2-91 |
| CHK | R. GROSS | 7-18-91 |
| APVD | R. GROSS | 7-18-91 |
| PRODUCT SPEC | – | |
| APPLICATION SPEC | – | |
| WEIGHT | – | |

CUSTOMER DRAWING

Tyco Electronics Corporation
Harrisburg, Pa 17105-3608

NAME: CONNECTOR ASSY,SIZE 2, CLASS A, PLUG/ARINC 600 –

| SIZE | CAGE CODE | DRAWING NO | RESTRICTED TO |
|---|---|---|---|
| A1 | 00779 | C-208973 | – |

SCALE 1:1 SHEET 1 OF 1 REV AC

ANP 4805 REV 31MAR2000

19MAY2008 us018412 H:\docmod\208973_1_c.dwg

Downloaded from Elcodis.com electronic components distributor