DRAWING MADE IN AMERICAN PROJECTION

1. PARTS COMPLY WITH AMP SOLDERABILITY SPEC. NO. 109-11-3

2. CONTACT IS PLATED OVERALL WITH .000050 NICKEL, THEN .000030 GOLD OVER CONTACT LENGTH INDICATED AND MATTE TIN ON SOLDER TAIL END.

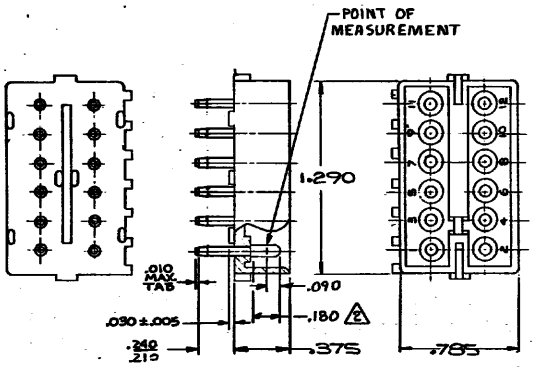

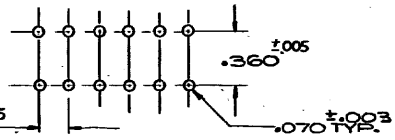

RECOMMENDED LAYOUT FOR .125" THICK P.C. BOARD

350220-2	NYLON	NATURAL	COPPER ALLOY	GOLD/2
350220-1	NYLON -	NATURAL	copper Alloy -	PRE-TIN
ASSEMELY NO.	HSG.-MATL.-	COLOR	PIN MATL.	FINISH

M	OBSOLETE 9-2 PER ECN CM-2706	JS/CB	8-7-92
L	OBSOLETE 1-1,21		
	5-1,6-1,5-2,6-2,7-1,8-1 9-1,1-2,2-2,3-2,4-2,5-2 6-2,7-2,8-2 CM 4713	KW / RS	6-19-86

LTR	REVISION RECORD	DR	CHK	DATE
K	RESTORED	KW	RS	10/20/87
J	REV. PER M-7375	SJ	[illegible]	8-27-86
H	[illegible] M-7285	MS	DH	7/11/85
G	ADDED USE 2, M-4494	MF	DH	6-3-71
F	REV. TAIL LENGTH M-5334	MF	DH	6-24-70
E	REVISED M-4161	MF	DH	12-7-71
D	ECN M-3871	MW	DH	9-7-70
C	ECN M-3452	GT	MW	3/11/70
B	ECN M-3156	MF	MW	9/11/69
A	REDRAWN ADDED CLASS	MF	MF	1/15/68

350220

REQUIRED PER ASSEMBLY

DESCRIPTION

NUMBER	NAME	REMARKS

© 1973 BY AMP INCORPORATED. ALL RIGHTS RESERVED. AMP PRODUCTS COVERED BY PATENTS AND/OR PATENTS PENDING.

CUSTOMER COPY REFERENCE ONLY

DATE 6-27-73

MATERIAL AND FINISH: SEE TABLE

AMP INCORPORATED

CLASS 11

TYPE 11

WIRE - RANGE - INSULATION

TOLERANCE EXCEPT AS NOTED ±.015 ±1° ±1°

SCALE

LOK CM B NO. 350220 REV M

NAME 12 CIRCUIT MATE-N-LOK P.C. BOARD PIN HEADER

AMP 1253 REV 11/68

Downloaded from Elcodis.com electronic components distributor