DO NOT SCALE
DIMENSIONS IN mm

METRIC

THIRD ANGLE PROJECTION

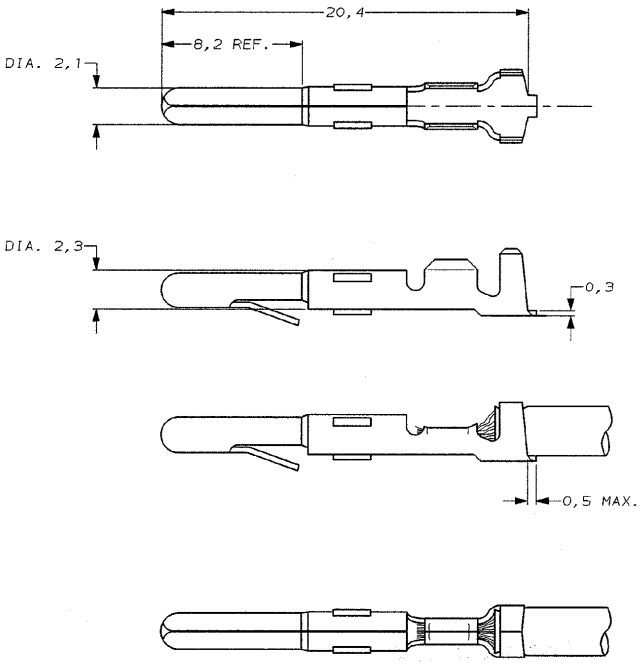

WIRE RANGE : 0,3-0,75mm
INSULATION RANGE : 1,4-2,4 DIA.

NOTES	PLATING	MATERIAL	PARTNUMBER
	-	-	-
	-	-	-
	-	-	-
	-	-	-
	-	-	-
	-	-	-
	-	-	-
	-	-	-
	PRE-TINPLATED	PHOSPHOR BR.	163558-4
	UNPLATED	PHOSPHOR BR.	163558-3
	PRE-TINPLATED	BRASS	163558-2
	UNPLATED	BRASS	163558-1

LTR.	REVISION RECORD	DR.	CHK.	DATE
-	-	-	-	-
-	-	-	-	-
-	-	-	-	-
-	-	-	-	-
-	-	-	-	-
-	-	-	-	-
-	-	-	-	-
B	EH-1221-96	JvL	AB	24-10-96

CUSTOMER DRAWING — FOR REFERENCE ONLY WILL NOT BE UPDATED

© COPYRIGHT 19- BY AMP HOLLAND B.V.
ALL INTERNATIONAL RIGHTS RESERVED. AMP PRODUCTS MAY BE COVERED BY U.S. AND FOREIGN AND/OR PATENTS PENDING.

THIS DRAWING IS UNPUBLISHED
~~RELEASED FOR PUBLICATION ,19~~

AMP HOLLAND B.V.
's-Hertogenbosch,
The Netherlands.

NAME: PIN MATE-N-LOK.

DR.: J.v.LIEMPT DATE: 24 OCT 96 | CHK.: A.BIJNEN. DATE: - | APP.: M.v.DRIEL DATE: -

DWG.No. C-163558 | REV.LTR. B | SHEET 1 OF 1 | A3

R6-210 (REV. 04-91)

Downloaded from Elcodis.com electronic components distributor