THIS DRAWING IS UNPUBLISHED. RELEASED FOR PUBLICATION ,19 .
© COPYRIGHT 19 BY AMP INCORPORATED. ALL RIGHTS RESERVED.

PROD CODE	LOC	DIST
4092	DF	50

REVISIONS

Y	LTR	DESCRIPTION	DATE	DWN	APVD
	F	ADD -14; 0600-4493-95	10-95	CCT	DE

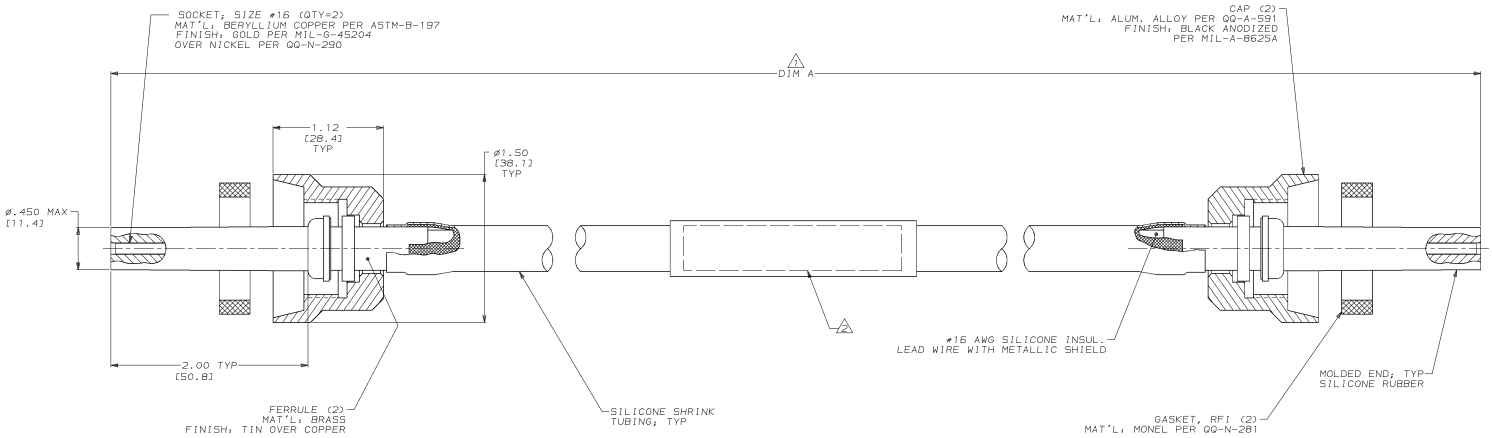

-	84.00 [2133.6]	1-865090-4
OBSOLETE	66.00 [1676.4]	1-865090-3
OBSOLETE	9.00 [228.6]	1-865090-2
OBSOLETE	28.00 [711.2]	1-865090-1
OBSOLETE	240.00 [6096.0]	1-865090-0
OBSOLETE	312.00 [7924.8]	865090-9
OBSOLETE	336.00 [8534.4]	865090-8
OBSOLETE	18.00 [457.2]	865090-7
OBSOLETE	102.00 [2590.8]	865090-6
-	36.00 [914.4]	865090-5
-	12.00 [304.8]	865090-4
-	120.00 [3048.0]	865090-3
-	60.00 [1524.0]	865090-2
-	24.00 [609.6]	865090-1
REMARKS	DIM A 1	PART NO.

1. TOLERANCE OF LEAD LENGTH:
   UP TO 24 INCHES [609.6] = ±.12 [±3.0]
   24 INCHES [609.6] & UP = ±1%
2. MARKED PER MIL-STD-130.
3. TO MATE WITH AMP LGH-4
   RECEPTACLE WITH 2.00 [50.8] BARREL DEPTH.

THIS DRAWING IS A CONFIDENTIAL DOCUMENT OF AMP INCORPORATED. IT IS TO BE NEITHER DISCLOSED NOR REPRODUCED WITHOUT WRITTEN CONSENT OF AMP INCORPORATED.

DIMENSIONS: INCHES [mm]
DIMENSIONS APPLIES AFTER PLATING.
0 PLC ±-
1 PLC ±-
2 PLC ±.02 [0.5]
3 PLC ±-
4 PLC ±-
ANGLES ±-
MATERIAL: SEE CALLOUTS
FINISH: SEE CALLOUTS

DWN: C.C.THOMAS 7-8-95
CHK: S.GLATFELTER 7-10-95
APVD: S.GLATFELTER 7-10-95
PRODUCT SPEC: –
APPLICATION SPEC: –
WEIGHT: –
CUSTOMER DRAWING

AMP
AMP Incorporated
Harrisburg, PA 17105-3608

NAME: LEAD ASSY,DBL END,RFI SHIELDED,LGH-4
SIZE: A1
CAGE CODE: 00779
DRAWING NO: C-865090
SCALE: 2:1
SHEET 1 OF 1
REV F

AMP 4843 REV 03MAY94

06-OCT-95 09:35:48 amp16412 /home/amp16412/edmond

Downloaded from Elcodis.com electronic components distributor