LOC	DIST	REVISIONS / ZEICHNUNGEN					
AI	-	F	LTR	DESCRIPTION / BESCHREIBUNG	DATE	DWN	APVD
PROJECT NR.	-	C1		PRINTING CORRECTED ECR-06-021058	31.08.2006	SR	SM

CONTACT ARRANGEMENT
VIEW FROM CONECTING SIDE

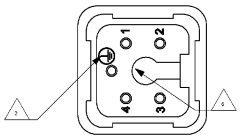

NOTES

1 CONTACT: 1 TO 4
SUITABLE SCREW CONTACTS: SERIES HA.3
OUTER DIMENSIONS OF INSULATION: MAX. Ø3,4 MM

2 GROUNDING CONTACT:
SUITABLE SCREW CONTACTS: SERIES HA.4
OUTER DIMENSIONS OF INSULATION: MAX. Ø3,4 MM

3 SUITABLE HOOD SIZE 1: SERIES HA; HD; EMV AND HIP

4 SUITABLE INSERTION AND EXTRACTION TOOL:
SCREWDRIVER 2,0x65

5 STANDARDS:
DIN EN 61984; DIN EN 60664-1

6 POLARIZATION RIPS

7 POS. 8 AND POS.9 PACKED SEPARATE IN POLY BAG

8 AUTHORIZATION: UL; CSA; VDE; SEV

9 PACKAGING:
10 SETS IN A CARTON, PRE-MOUNTED

LATERAL PRINT
PN 1-1

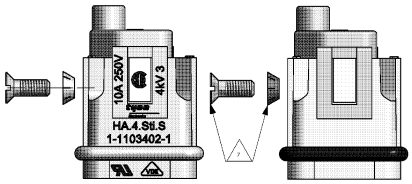

LATERAL PRINT
PN 0-1

LATERAL PRINT
PN 0-2

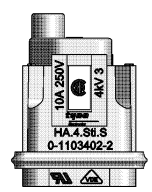

LATERAL PRINT
PN 0-3

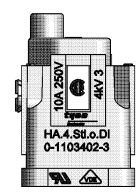

CONTACT ARRANGEMENT
VIEW FROM TERMINATION SIDE

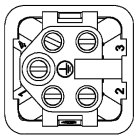

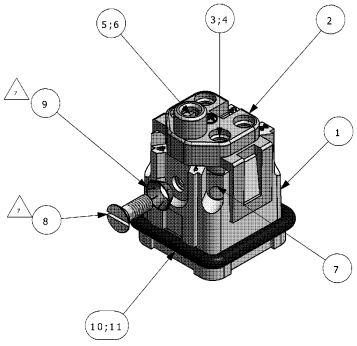

0-3	0-2	0-1	1-1	DESCRIPTION	MATERIAL	SURFACE	COLOR	ITEM	NOTES
	1			PROFILE SEAL	NEOPRENE		BLACK	11	CONDUCTIV
		1	1	PROFILE SEAL	NEOPRENE		BLACK	10	
1		1	1	SPRING WASHER	STEEL	ZINK PLATED		9	V3.2
1		1	1	SLOTED COUNTER FLAT HEAD SCREW	STEEL	ZINK PLATED		8	M3x8
5	5	5	5	SLOTED CHEESE HEAD SCREW	BRASS	NICKEL PLATED		7	M3x5.5
		1		EARTING CONTACT PIN WITH ANGLE	BRASS	GOLD PLATED		6	
1	1		1	EARTING CONTACT SOCKET WITH ANGLE	BRASS	SILVER PLATED		5	
		4		CONTACT SOCKET	BRASS	GOLD PLATED		4	
4	4		4	CONTACT SOCKET	BRASS	SILVER PLATED		3	
1	1	1	1	COVER	PC		BEIGE	2	
1	1	1	1	MALE INSERT	PC		BEIGE	1	

HA.4.Sti.S
HA.4.Sti.S-AU
HA.4.Sti.S
HA.4.Sti.S.o.DI

THIS DRAWING IS A CONTROLLED DOCUMENT AND ANY INCORPORATED IN ITS DEVELOPMENT TO CHANGE OR USE THE CONTROLLED DOCUMENTS. DISTRIBUTION OR DISCLOSURE OF THIS DRAWING IS PROHIBITED. DIMENSIONS AND DRAWING ARE NOT TO BE USED FOR CONTROLLING DIMENSIONS. ALL DIMENSIONS AND DRAWINGS ARE SUBJECT TO CHANGE AND ARE NOT TO BE USED FOR CONTROLLING DIMENSIONS. DIMENSIONS AND DRAWINGS ARE SUBJECT TO CHANGE AND ARE NOT TO BE USED FOR CONTROLLING DIMENSIONS.

DIMENSIONS:
DIMENSIONEN:
in m

TOLERANCES UNLESS OTHERWISE SPECIFIED:
ALLGEMEIN TOLERANZEN
n. ISO 8015 - ±0.5
n. ISO 2768 - ±0.5
n. DIN 16901 - ±0
n. PLC ±
1 PLC ±
2 PLC ±
3 PLC ±
ANGLES / WINKEL ±

MATERIAL

FINISH / OBERFLÄCHE / FARBE

DWN	29.07.1997 H.BRAUN
CHK	29.07.1997 SCHWEIGER
APVD	27.03.2006 T.SCHNURPFEIL
PRODUCT SPEC. / PRODUKTSPEZ.	108-74008
APPLICATION SPEC. / VERARBEITUNGSSPEZ.	114-74010
WEIGHT / GEWICHT	0,0012 KG

tyco Electronics
Tyco / Electronics AMP GmbH
D - 53819 Neunkirchen

NAME: MALE INSERT
HA.4.STI.S

SIZE	CAGE CODE	DRAWING NO. / ZEICHNUNGS-NR.	RESTRICTED TO NUR FÜR
A2	00779	C- 1103402	

CUSTOMER DRAWING / KUNDENZEICHNUNG

SCALE / MASSSTAB	SHEET / BLATT	OF / VON	REV.
1:1	1	1	C1

AMP 1471-9 REV 27/8/96
This is a TRANSLATED file from Computerwork, Inc., Madison Kansas 12.2.97

Downloaded from Elcodis.com electronic components distributor