THIS DRAWING IS UNPUBLISHED. RELEASED FOR PUBLICATION 19-
© COPYRIGHT 20 BY TYCO ELECTRONICS CORPORATION. ALL RIGHTS RESERVED.

CODE	DIST
GE	00

REVISIONS

P	LTR	DESCRIPTION	DATE	DWN	APVD
	D	REVISED PER EC 0K40-0405-02	17APR2002	AH	TA
	D1	REVISED PER EC 0K40-0248-03	02SEP2003	AH	TA
	E	REVISED PER 0K40-0074-04	23MAR2004	AG	TA
	F	REVISED PER ECR 05-003000	17NOV2005	DLD	JLT

1. MATERIAL: 0.30 THICK COPPER ALLOY, PREPLATED WITH 0.0008 MINIMUM THICK MATTE TIN (ELV COMPLIANT).

2. 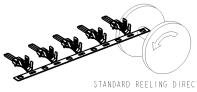
STANDARD REELING DIRECTION

3. 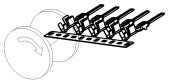
REVERSE REELING DIRECTION

4. QUALIFICATION OF THE CRIMP APPLICATION TOOLING SHALL BE CONTROLED BY THE REQUIREMENTS ESTABLISHED UNDER USCAR 21.

5. LOOSE END SPLICING TO BE USED.

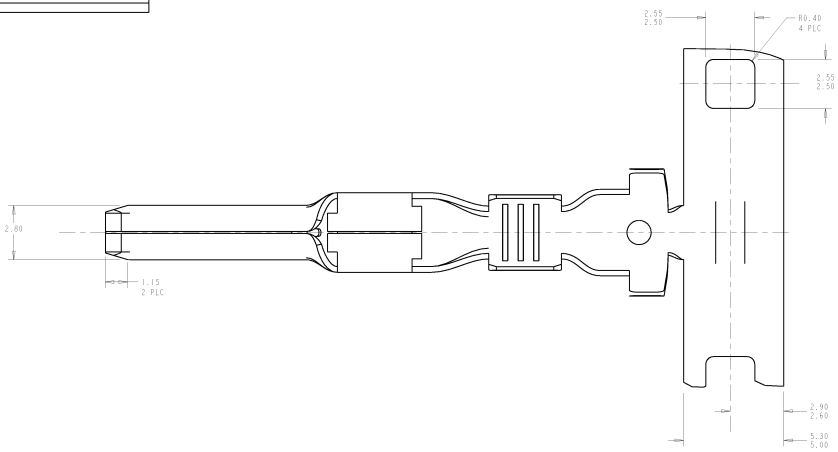

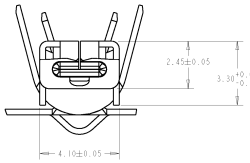

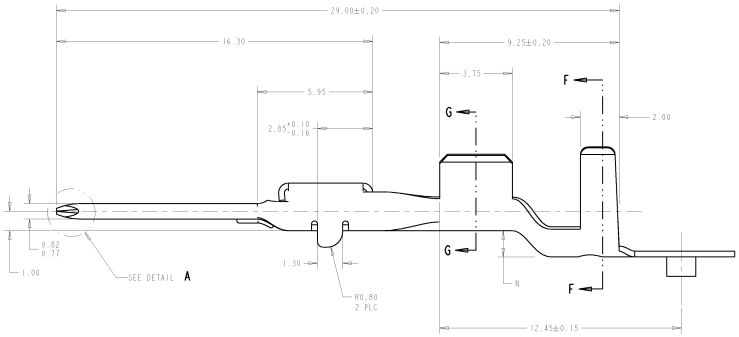

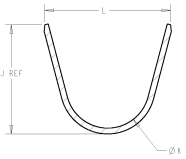

SECTION F-F

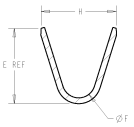

SECTION G-G

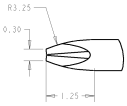

DETAIL A
SCALE 20:1

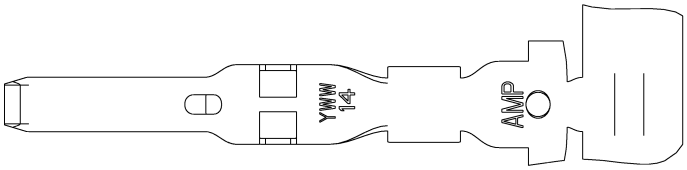

3	1-1326031-1 REELED FOR AMP APPLICATORS							12 AWG	1-1326031-2
2	1.35	6.8	4.30	5.89	4.7	2.7	5.25	12 AWG	1-1326031-1
3	1326031-5 REELED FOR AMP APPLICATORS							14 AWG	1-1326031-0
	1326031-4 REELED FOR AMP APPLICATORS							16 AWG	1326031-9
	1326031-3 REELED FOR AMP APPLICATORS							18 AWG	1326031-8
	1326031-2 REELED FOR AMP APPLICATORS							20 AWG	1326031-7
	1326031-1 REELED FOR AMP APPLICATORS							22 AWG	1326031-6
2	1.35	6.5	4.30	5.62	3.9	1.70	3.88	14 AWG	1326031-5
	1.10	5.6	3.80	4.54	3.9	1.70	3.88	16 AWG	1326031-4
	1.10	5.6	3.80	4.54	3.3	1.30	2.76	18 AWG	1326031-3
	0.90	5.0	3.40	4.11	3.3	1.30	2.76	20 AWG	1326031-2
	0.90	5.0	3.40	4.11	2.5	0.90	2.11	22 AWG	1326031-1
REELING	N	L	ØK	J	H	ØF	E	WIRE SIZE	PART NO.

THIS DRAWING IS CONSIDERED THE PROPERTY OF TYCO ELECTRONICS CORPORATION AND SHALL NOT BE COPIED OR USED IN ANY MANNER.

DIMENSIONS: mm

TOLERANCES UNLESS OTHERWISE SPECIFIED:
.X PLC ±
.XX PLC ±0.3
.XXX PLC ±0.10
.X PLC ±
.XX PLC ±
.XXX PLC ±
ANGLES ±0°

MATERIAL 1
FINISH 1

DWN D. STRAUSSER 28APR99
CHK D. BROWN 28APR99
APVD D. BROWN 28APR99

PRODUCT SPEC: SAE/USCAR-2 R/97
APPLICATION SPEC: 114-13013
WEIGHT: -

AMP Tyco Electronics Harrisburg, PA 17105-3608

NAME: 2.8mm BLADE, SEALED

SIZE A | CAGE CODE 00779 | DRAWING NO C-1326031 | DESTINATION -

CUSTOMER DRAWING | SCALE 10:1 | SHEET 1 OF 1 | REV F

AMP 4005 REV 31MAR2000

Downloaded from Elcodis.com electronic components distributor