THIS DRAWING IS UNPUBLISHED. RELEASED FOR PUBLICATION 2007
© COPYRIGHT 2007 BY TYCO ELECTRONICS CORPORATION. ALL RIGHTS RESERVED.

LOC	DIST
A1	-

REVISIONS

P	LTR	DESCRIPTION	DATE	DRN	APVD
	A1	NEW DRAWING CREATED	29MAY2007	Haas	Sre.

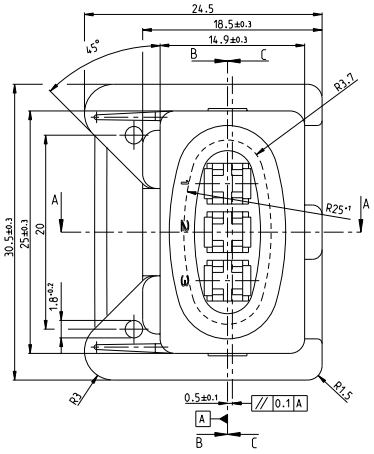

Schnitt A-A
SECTION

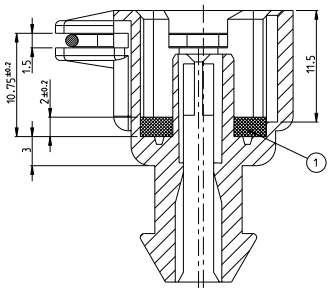

Schnitt B-B
SECTION

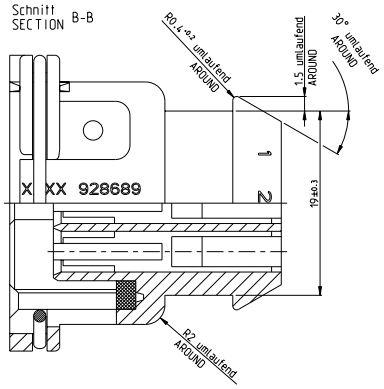

Schnitt C-C
SECTION

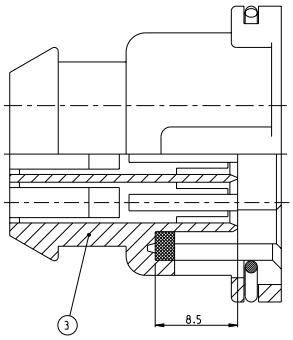

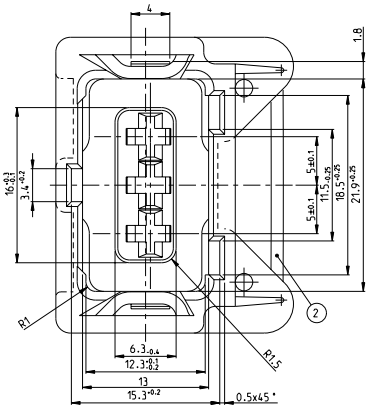

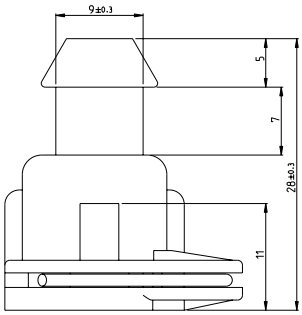

	OBSOLETE		OBSOLETE	OBSOLETE								
REVISION	-	A	-	-	A	A	A	A				
	X								3	3 POS. HOUSING	PA6.6 GV30	YELLOW
		X							3	3 POS. HOUSING	PA6.6 GV30	RED
			X						3	3 POS. HOUSING	PA6.6 GV30	GREEN
				X					3	3 POS. HOUSING	PA6.6 GV30	BLUE
					X				3	3 POS. HOUSING	PA6.6 GV30	BROWN
						X			3	3 POS. HOUSING	PA6.6 GV30	BLACK
							X		3	3 POS. HOUSING	PA6.6 GV30	GREY
								X	3	3 POS. HOUSING	PA6.6 GV30	WHITE
	X	X	X	X	X	X	X		2	SPRING	SPRING STEEL WIRE Federstahl	PLAIN Blank
	X	X	X	X	X	X	X	X	1	SEALING	CR	BLACK
	928748-8	928748-7	928748-6	928748-5	928748-4	928748-3	928748-2	928748-1	ITEM NO. Pos.	DESCRIPTION	MATERIAL Werkstoff	COLOR Farbe

DIMENSIONS: mm

TOLERANCES UNLESS OTHERWISE SPECIFIED:
0 PLC ±-
1 PLC ±-
2 PLC ±-
3 PLC ±-
ANGLES ±5°
FINISH -

MATERIAL -

DRN	Kowalik,R.	30JAN1987
CHK	Mzik,U.	10FEB1987
APVD	Bleicher,M.	01SEP2006

PRODUCT SPEC -
APPLICATION SPEC -
WEIGHT -

Tyco Electronics AMP GmbH
64625 Bensheim (Germany)

NAME ASSY OF 3 POS. HOUSING FOR JUNIOR (POWER) TIMER CONTACT

SIZE A1 | CAGE CODE 00779 | DRAWING NO C-828748 | RESTRICTED TO -

CUSTOMER DRAWING | SCALE 5:1 | SHEET 1 OF 1 | REV A1

AMP 4805 REV 31MAR2000
Pro/ENGINEER DRAWING

Downloaded from Elcodis.com electronic components distributor